Pneumatic Division
Richland, Michigan USA
www.parker.com/pneumatics

FILTER / REGULATORS

Bulletin Number			Bulletin Description
☐	2FR100G	Rev. 12	05E Economy, Installation & Service
☐	2FR100G	Rev. 12	06E “B&C” Compact, Installation & Service
☐	2R201	Rev. 3	06E “B&C” Compact, Regulator Tamperproof
☐	1FR100G	Rev. 10	06E Compact, Installation & Service
☐	2FR100G	Rev. 12	07E “C” Standard, Installation & Service
☐	2R201	Rev. 3	07E “C” Standard, Regulator Tamperproof
☐	1FR100G	Rev. 10	07E Standard, Installation & Service
☐	2FR100G	Rev. 12	12E “A” Coalescing Standard, Installation & Service
☐	1R402F	Rev. 12	14E “B & C” Miniature, Installation & Service
☐	1R602	Rev. 7	14E “D” Miniature, Installation & Service
☐	2FR100G	Rev. 12	27E Precision, Installation & Service
☐	1FR110	Rev. 2	B34 Miniature, Installation & Service
☐	5FRL100	Rev. 5	Global P3 Air Preparation Systems
☐	P3Y-INC	Rev. 3	Global P3Y Hi-Flow, Installation & Service
☐	1M107C	Rev. 1	P3AE (8AE) Miniature, Installation & Service
☐	2FR300D	Rev. 9	P3N Hi-Flow, Installation & Service
☐	Safety Guide	——	PDN Safety Guide

Visit www.pdnplu.com for additional instruction sheets.

Pneumatic Division
Richland, Michigan 49083
269-629-5000

Installation and Service Instructions: 1FR100G

Compact & Standard Filter / Regulator

ISSUED: April, 2006
Supersedes: November, 2003
Doc.# 1FR100, ECN #060299, Rev.10

⚠ WARNING

To avoid unpredictable system behavior that can cause personal injury and property damage:

- **Disconnect electrical supply (when necessary) before installation, servicing, or conversion.**
- **Disconnect air supply and depressurize all air lines connected to this product before installation, servicing, or conversion.**
- **Operate within the manufacturer's specified pressure, temperature, and other conditions listed in these instructions.**
- **Medium must be moisture-free if ambient temperature is below freezing.**
- **Service according to procedures listed in these instructions.**
- **Installation, service, and conversion of these products must be performed by knowledgeable personnel who understand how pneumatic products are to be applied.**
- **After installation, servicing, or conversion, air and electrical supplies (when necessary) should be connected and the product tested for proper function and leakage. If audible leakage is present, or the product does not operate properly, do not put into use.**
- **Warnings and specifications on the product should not be covered by paint, etc. If masking is not possible, contact your local representative for replacement labels.**

⚠ CAUTION

Polycarbonate bowls, being transparent and tough, are ideal for use with Filters and Lubricators. They are suitable for use in normal industrial environments, but should not be located in areas where they could be subjected to direct sunlight, an impact blow, nor temperatures outside of the rated range. As with most plastics, some chemicals can cause damage. Polycarbonate bowls should not be exposed to chlorinated hydrocarbons, ketones, esters and certain alcohols. They should not be used in air systems where compressors are lubricated with fire-resistant fluids such as phosphate ester and diester types.

Metal bowls are recommended where ambient and/or media conditions are not compatible with polycarbonate bowls. Metal bowls resist the action of most such solvents, but should not be used where strong acids or bases are present or in salt laden atmospheres. Consult the factory for specific recommendations where these conditions exist.

TO CLEAN POLYCARBONATE BOWLS USE MILD SOAP AND WATER ONLY! DO NOT use cleansing agents such as acetone, benzene, carbon tetrachloride, gasoline, toluene, etc., which are damaging to this plastic.

Bowl guards are recommended for added protection of polycarbonate bowls where chemical attack may occasionally occur.

Introduction

Follow these instructions when installing, operating, or servicing the product.

Application Limits

These products are intended for use in general purpose compressed air systems only.

With Polycarbonate Bowl

	kPa	PSIG	bar
Operating Pressure Maximum	**1000**	**150**	**10.3**

Operating Temperature Maximum	52°C (125°F)
Operating Temperature Minimum	0°C (32°F)

With Metal Bowl

	kPa	PSIG	bar
Operating Pressure Maximum	**1700**	**250**	**17.0**

Operating Temperature Maximum:	80°C (175°F)
Operating Temperature Minimum:	0°C (32°F)

With Automatic Drain

	kPa	PSIG	bar
Operating Pressure Maximum	**68**	**10**	**0.68**

⚠ WARNING

Product rupture can cause serious injury.
Do not connect regulator to bottled gas.
Do not exceed maximum primary pressure rating.

Installation

1. The equipment to which the FILTER/REGULATOR is attached should be internally cleaned to remove all traces of accumulated oil and dirt. Also, new pipe or hose should be installed between the filter and equipment being protected.
2. Blow all upstream pipe work clear of accumulated dirt and liquids.
3. Select a filter/regulator location as close as possible to the equipment being protected.
4. Install filter/regulator so that air flows in the direction of arrow on body.
5. Install filter/regulator vertically with the bowl drain mechanism at the bottom. Free moisture will thus drain into the sump ("quiet zone") at the bottom of the bowl. Automatic drain models are recommended as standard equipment.
6. Gauge ports are located on both sides of the REGULATOR body for your convenience. It is necessary to install a gauge or socket pipe plugs into each port during installation.

⚠ WARNING

FAILURE OR IMPROPER SELECTION OR IMPROPER USE OF THE PRODUCTS AND/OR SYSTEMS DESCRIBED HEREIN OR RELATED ITEMS CAN CAUSE DEATH, PERSONAL INJURY AND PROPERTY DAMAGE.

This document and other information from The Company, its subsidiaries and authorized distributors provide product and/or system options for further investigation by users having technical expertise. It is important that you analyze all aspects of your application, including consequences of any failure and review the information concerning the product or systems in the current product catalog. Due to the variety of operating conditions and applications for these products or systems, the user, through its own analysis and testing, is solely responsible for making the final selection of the products and systems and assuring that all performance, safety and warning requirements of the application are met.

The products described herein, including without limitation, product features, specifications, designs, availability and pricing, are subject to change by The Company and its subsidiaries at any time without notice.

EXTRA COPIES OF THESE INSTRUCTIONS ARE AVAILABLE FOR INCLUSION IN EQUIPMENT / MAINTENANCE MANUALS THAT UTILIZE THESE PRODUCTS. CONTACT YOUR LOCAL REPRESENTATIVE.

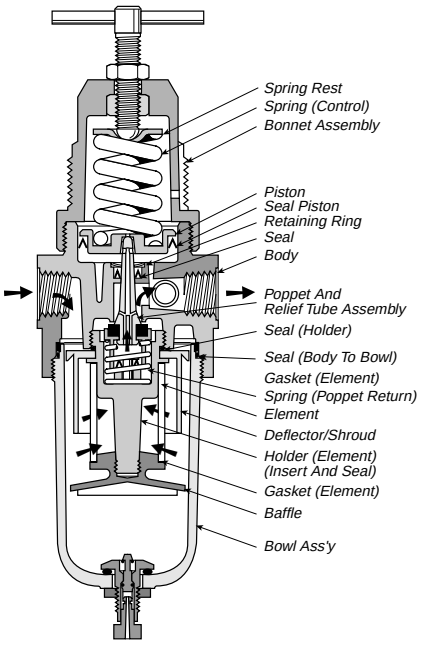

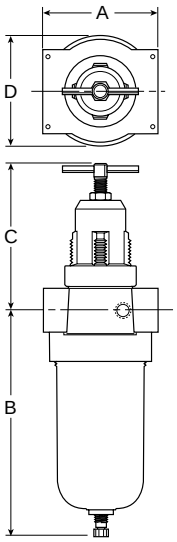

Dimensions

Model	Port Size	A	B	B (with Auto Drain)	C	D
Compact	1/4"-3/8"	2.75	5.77	5.65	4.75	2.64
		70mm	147mm	144mm	67mm	67mm
Standard	3/8"-1/2"-3/4"	3.24	7.08	6.96	5.09	3.03
		82mm	180mm	177mm	129mm	77mm

Operation & Service

1. Both free moisture and solids are removed automatically by the FILTER/REGULATOR. There are no moving parts.
2. Drain whenever water level in sump “quiet zone” reaches the lower baffle. Install Automatic Drain if bowl draining is frequent.
3. The filter element should be removed and replaced when the pressure differential across the filter is excessive.
4. To remove the filter element: **SHUT AIR DOWN** and exhaust the secondary pressure.
   a. Unscrew threaded bowl.
   b. Unscrew element holder and remove filter element and gaskets.
   c. Clean bowl and internal parts before reassembling.
   d. Replace element and gaskets (2).
   e. Attach element post assembly and tighten firmly.
   f. Replace bowl seal; lubricate seal to assist in retaining it in position. Use only mineral base oils or grease. Do NOT use synthetic oils such as esters and do NOT use silicones.
   g. Screw bowl into body.

The regulator may be serviced without removing it from the line. Before disassembling FILTER/REGULATOR, **SHUT OFF AIR SUPPLY.** Turn the adjusting handle counterclockwise to bleed down trapped pressure. For servicing piston or control springs, unscrew bonnet from body. For servicing the poppet and relief tube, remove threaded bowl and filter element assembly.

BEFORE TURNING ON AIR SUPPLY, TURN ADJUSTING HANDLE COUNTERCLOCKWISE UNTIL COMPRESSION IS RELEASED FROM PRESSURE CONTROL SPRING. Turn on air pressure. Then proceed to adjust to desired downstream pressure by turning adjusting handle clockwise. This permits pressure to build up slowly in the downstream line.

Kits Available

Description	Kit No.	
	Compact	Standard
Element Kit 40 Micrometer (1) Element (Filter) (1) Seal (Body to Bowl) (2) Gasket (Element)	PS101	PS201
Element Cartridge Kit, 40 Micrometer (1) Holder (Element) (1) Element (Filter) (2) Gasket (Element) (1) Baffle (1) Shroud (1) Deflector (1) Seal (Holder) (1) Seal (Body to Bowl)	PS114	PS214
Polycarbonate Bowl Kit (1) Polycarbonate Bowl with Manual Drain (1) Seal (Body to Bowl)	PS166	PS266
Relieving Piston Kit (1) Seal Piston	PS110	PS210
Poppet Kit (1) Poppet and Relief Tube Assembly	PS113	PS212

Accessories

Accessories listed below are available in complete Filter units.

Description	Kit No.	
	Compact	Standard
Automatic Drain	PS506	
5 Micrometer Element Kit	PS103	PS203
25 Micrometer Element Kit	PS102	PS202
Bowl Guard Kit	PS107	PS207
Polycarbonate Bowl (Auto Drain)	PS143	PS243
Metal Bowl (Auto Drain)	PS148	PS248
Metal Bowl with Sight Glass (Manual Drain)	PS169	PS269
Plastic Knob Adjusting Handle	P69726	
Low Pressure Spring 1-60 PSIG	P78481	
Standard Pressure Spring 2-125 PSIG	P78482	
High Pressure Spring 5-250 PSIG	P78483	
Panel Mount Nut*	P78520	
Non-Relieving Piston	PS111	
Gauges 0-60 PSIG, 0-400 kPa 0-160 PSIG, 0-1100 kPa 0-300 PSIG, 0-2000 kPa	 K4520N14060 K4520N14160 K4520N14300	
Mounting Bracket Kit*	PS109	PS209

* Not supplied with units, must be ordered separately.

Pneumatic Division
Richland, Michigan 49083
269-629-5000

Installation & Service Instructions: 1FR110

B34 Miniature Filter / Regulators

ISSUED: February, 2010
Supersedes: May, 2007

Doc.# 1FR110, EN# 100185, Rev. 2

⚠ WARNING

To avoid unpredictable system behavior that can cause personal injury and property damage:

- **Disconnect electrical supply (when necessary) before installation, servicing, or conversion.**
- **Disconnect air supply and depressurize all air lines connected to this product before installation, servicing, or conversion.**
- **Operate within the manufacturer's specified pressure, temperature, and other conditions listed in these instructions.**
- **Medium must be moisture-free if ambient temperature is below freezing.**
- **Service according to procedures listed in these instructions.**
- **Installation, service, and conversion of these products must be performed by knowledgeable personnel who understand how pneumatic products are to be applied.**
- **After installation, servicing, or conversion, air and electrical supplies (when necessary) should be connected and the product tested for proper function and leakage. If audible leakage is present, or the product does not operate properly, do not put into use.**
- **Warnings and specifications on the product should not be covered by paint, etc. If masking is not possible, contact your local representative for replacement labels.**

⚠ WARNING

Product rupture can cause serious injury.
Do not connect regulator to bottled gas.
Do not exceed maximum primary pressure rating.

Safety Guide

For more complete information on recommended application guidelines, see the Safety Guide section of Pneumatic Division catalogs or you can download the **Pneumatic Division Safety Guide** at: www.parker.com/safety

Safety: Polycarbonate Bowls

⚠ CAUTION

Polycarbonate bowls, being transparent and tough, are ideal for use with Filters and Lubricators. They are suitable for use in normal industrial environments, but should not be located in areas where they could be subjected to direct sunlight, an impact blow, nor temperatures outside of the rated range. As with most plastics, some chemicals can cause damage. Polycarbonate bowls should not be exposed to chlorinated hydrocarbons, ketones, esters and certain alcohols. They should not be used in air systems where compressors are lubricated with fire-resistant fluids such as phosphate ester and di-ester types.

Metal bowls are recommended where ambient and/or media conditions are not compatible with polycarbonate bowls. Metal bowls resist the action of most such solvents, but should not be used where strong acids or bases are present or in salt laden atmospheres. Consult the factory for specific recommendations where these conditions exist.

TO CLEAN POLYCARBONATE BOWLS USE MILD SOAP AND WATER ONLY! DO NOT use cleansing agents such as acetone, benzene, carbon tetrachloride, gasoline, toluene, etc., which are damaging to this plastic.

Bowl guards are recommended for added protection of polycarbonate bowls where chemical attack may occur.

⚠ WARNING

To avoid polycarbonate bowl rupture that can cause personal injury or property damage, do not exceed bowl pressure of temperature ratings. Polycarbonate bowls have a 150 PSIG (1030 kPa) pressure rating and a maximum temperature rating of 52°C (125°F).

Introduction

Follow these instructions when installing, operating, or servicing the product.

Application Limits

These products are intended for use in general purpose compressed air systems only.

Maximum Recommended Pressure Drop:

	kPa	PSIG	bar
Particulate Filter	70	10	0.7

Operating Pressure Maximum	kPa	PSIG	bar
Polycarbonate Bowl	1034	150	10.3
Metal Bowl	1724	250	17.2
Piston Drain	1207	175	12.0

Operating Temperature Range

Polycarbonate Bowl	Max. 52°C (125°F)
Metal Bowl	Max. 80°C (175°F)
Piston Drain	Max. 52°C (125°F)

Symbols

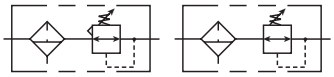

Relieving Filter / Regulator Adjustable ***Non-Relieving Filter / Regulator Adjustable***

Installation

1. The Filter / Regulator should be installed with reasonable accessibility for service whenever possible – repair service kits are available. Keep pipe or tubing lengths to a minimum with inside clean and free of dirt and chips. Pipe joint compound should be used sparingly and applied only to the male pipe – never into the female port. Do not use PTFE tape to seal pipe joints – pieces have a tendency to break off and lodge inside the unit, possibly causing malfunction. Also, new pipe or hose should be installed between the Filter / Regulator and equipment being protected.
2. The upstream pipe work must be clear of accumulated dirt and liquids.
3. Select a Filter / Regulator location as close as possible to the equipment being protected.
4. Install Filter / Regulator so that air flows into port labelled "IN" on body.

⚠ WARNING

FAILURE OR IMPROPER SELECTION OR IMPROPER USE OF THE PRODUCTS AND/OR SYSTEMS DESCRIBED HEREIN OR RELATED ITEMS CAN CAUSE DEATH, PERSONAL INJURY AND PROPERTY DAMAGE.

This document and other information from The Company, its subsidiaries and authorized distributors provide product and/or system options for further investigation by users having technical expertise. It is important that you analyze all aspects of your application, including consequences of any failure and review the information concerning the product or systems in the current product catalog. Due to the variety of operating conditions and applications for these products or systems, the user, through its own analysis and testing, is solely responsible for making the final selection of the products and systems and assuring that all performance, safety and warning requirements of the application are met.

The products described herein, including without limitation, product features, specifications, designs, availability and pricing, are subject to change by The Company and its subsidiaries at any time without notice.

EXTRA COPIES OF THESE INSTRUCTIONS ARE AVAILABLE FOR INCLUSION IN EQUIPMENT / MAINTENANCE MANUALS THAT UTILIZE THESE PRODUCTS. CONTACT YOUR LOCAL REPRESENTATIVE.

5. Install Filter / Regulator vertically with the bowl drain mechanism at the bottom. Free moisture will thus drain into the sump ("quiet zone") at the bottom of the bowl.
6. Gauge ports are located on both sides of the Filter / Regulator body for your convenience. It is necessary to install a gauge or socket pipe plugs into each port during installation.

Operation

1. Both free moisture and solids are removed automatically by the filter.
2. Manual drain filters must be drained regularly before the separated moisture and oil reaches the bottom of the Baffle or End Cap.
3. The Filter Element should be removed and replaced when pressure differential across the filter is 69 kPa (10 PSIG).
4. Before turning on the air supply, disengage the Adjusting Knob by pulling upward. Turn Adjusting Knob counterclockwise until the compression is released from the Pressure Control Spring.
5. Then turn Knob clockwise and adjust regulator to desired downstream pressure. This permits pressure to build up slowly in the downstream line.
6. To decrease regulated pressure settings, always reset from a pressure lower than the final setting required. Example, lowering the secondary pressure from 550 to 410 kPa (80 to 60 PSIG) is best accomplished by dropping the secondary pressure to 350 kPa (50 PSIG), then adjusting upward to 410 kPa (60 PSIG).
7. When desired secondary pressure setting has been reached, push the Knob down to lock this pressure setting.

Service

⚠ **Caution: Disconnect or shut off air supply and exhaust the primary and secondary pressures before servicing unit. Turning the adjusting knob counterclockwise does not vent downstream pressure on non-relieving regulators. Downstream pressure must be vented before servicing regulator.**

⚠ **Caution: Grease packets are supplied with kits for lubrication of seals. Use only mineral based grease or oils. Do not use synthetic oils such as esters. Do not use silicones.**

Note: After servicing unit, turn on air supply and adjust regulator to the desired downstream pressure. Check unit for leaks. If leakage occurs, do not operate - conduct repairs and retest.

Servicing Filter Element - (Refer to Figure 1)

1. Unscrew and remove Bowl.
2. Unscrew the Element Retainer from Body and then remove Element.
3. Clean all internal parts and bowl before reassembling.
4. Install new element. IMPORTANT: The Filter / Regulator will not operate properly if the Deflector is not installed properly. The Deflector must be installed between the Element Retainer and the Filter Body.
5. Attach Element Retainer and finger tighten firmly.
6. Replace Bowl Seal. Lightly lubricate new seal to assist with retaining it in position.
7. Install Bowl into Body and tighten; hand tight, plus 1/4 turn.

Servicing Regulator - (Refer to Figure 1)

1. Disengage the Adjusting Knob by pulling upward. Turn Adjusting Knob counterclockwise until the compression is released from the Pressure Control Spring.
2. Remove the Bonnet and Bowl assemblies by unscrewing the Bonnet and Bowl from the body.
3. Remove Diaphragm Assembly from Bonnet Assembly.
4. Remove Valve Seat, Poppet Assembly, Poppet Return Spring.
5. Clean and carefully inspect parts for wear or damage. Wipe parts, clean with soapy water or denatured alcohol but do not use denatured alcohol on plastic bowl or sight gauge. If using compressed air to blow dry, be sure to wear appropriate eye protection. If replacement is necessary, use parts from service kits. Clean Bowl.
6. Lubricate O-rings with grease found in service kits.
7. Install Poppet Return Spring, Poppet Assembly, and Valve Seat.
8. Install Diaphragm Assembly into Body Assembly. Assemble Bonnet Assembly into Body and tighten per Figure 1.

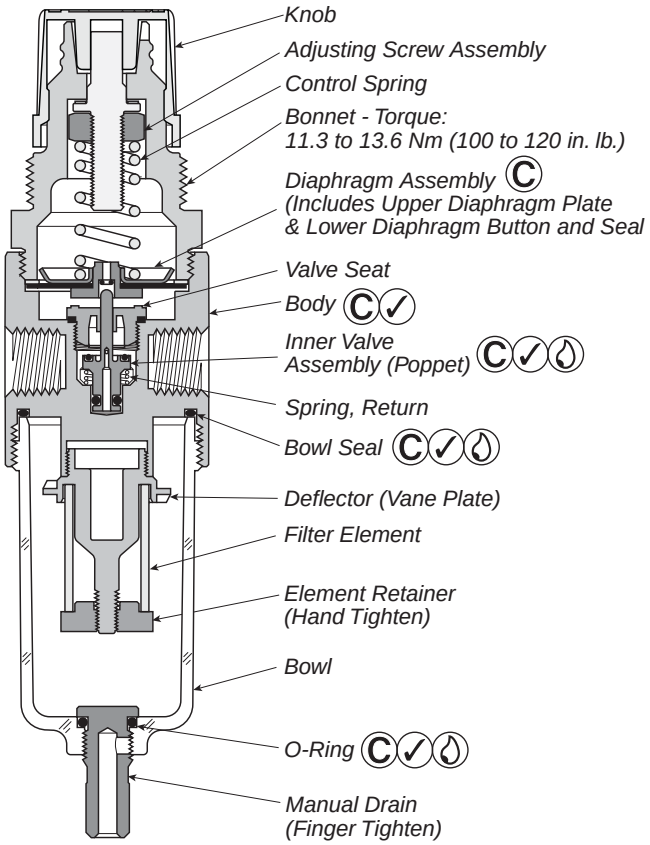

Figure 1

💧 Lightly grease with provided lubricant.

✓ Inspect for nicks, scratches, and surface imperfections. If present, reduced service life is probable and future replacement should be planned.

Ⓒ Clean with lint-free cloth.

Service / Parts Kits Available

Description	B34 (1/8" & 1/4")
Bowl Kits	
Polycarbonate	BK504Y
Polycarbonate (with Piston Drain)	BK504SY
Zinc	BK505Y
Zinc (with Piston Drain)	BK505SY
Bowl Seal	GSK-504Z101
Filter Element (5 Micron)	FRP-96-729
Filter Element (40 Micron)	FRP-96-294
Gauge, 0 to 60 (0 to 4 bar)	K4515N18060
Gauge, 0 to 160 (0 to 11 bar)	K4515N18160
Mounting Bracket / Nut	SA161X57
Piston Drain (Max. Pressure 150 PSIG)	RK504SY
Panel Mount Nut	R05X51
Regulator Repair Kit (Relieving)	GRP-96-725
Regulator Repair Kit (Non-Relieving)	GRP-96-726
Spring, 0-25 PSIG (0 to 1.7 bar)	GRP-95-111
Spring, 0-60 PSIG (0 to 4 bar)	GRP-96-718
Spring, 0-125 PSIG (0 to 8.6 bar)	GRP-96-717

Pneumatic Division
Richland, Michigan 49083
269-629-5000

Installation & Service Instructions: 1M107C

1/8" & 1/4" P3A-E Mini Modular Filter / Regulator

ISSUED: November, 2003
Supersedes: January, 2000
Doc.# 1M107, ECN# 030539, Rev. 1

⚠ WARNING

To avoid unpredictable system behavior that can cause personal injury and property damage:

- **Disconnect electrical supply (when necessary) before installation, servicing, or conversion.**
- **Disconnect air supply and depressurize all air lines connected to this product before installation, servicing, or conversion.**
- **Operate within the manufacturer's specified pressure, temperature, and other conditions listed in these instructions.**
- **Medium must be moisture-free if ambient temperature is below freezing.**
- **Service according to procedures listed in these instructions.**
- **Installation, service, and conversion of these products must be performed by knowledgeable personnel who understand how pneumatic products are to be applied.**
- **After installation, servicing, or conversion, air and electrical supplies (when necessary) should be connected and the product tested for proper function and leakage. If audible leakage is present, or the product does not operate properly, do not put into use.**
- **Warnings and specifications on the product should not be covered by paint, etc. If masking is not possible, contact your local representative for replacement labels.**

⚠ CAUTION

Polycarbonate bowls, being transparent and tough, are ideal for use with Filters and Lubricators. They are suitable for use in normal industrial environments, but should not be located in areas where they could be subjected to direct sunlight, an impact blow, nor temperatures outside of the rated range. As with most plastics, some chemicals can cause damage. Polycarbonate bowls should not be exposed to chlorinated hydrocarbons, ketones, esters and certain alcohols. They should not be used in air systems where compressors are lubricated with fire-resistant fluids such as phosphate ester and diester types.

Metal bowls are recommended where ambient and/or media conditions are not compatible with polycarbonate bowls. Metal bowls resist the action of most such solvents, but should not be used where strong acids or bases are present or in salt laden atmospheres. Consult the factory for specific recommendations where these conditions exist.

TO CLEAN POLYCARBONATE BOWLS USE MILD SOAP AND WATER ONLY! DO NOT use cleansing agents such as acetone, benzene, carbon tetrachloride, gasoline, toluene, etc., which are damaging to this plastic.

Bowl guards are recommended for added protection of polycarbonate bowls where chemical attack may occasionally occur.

Introduction

Follow these instructions when installing, operating, or servicing the product.

Application Limits

These products are intended for use in general purpose compressed air systems only.

With Polycarbonate Bowl

	kPa	PSIG	bar
Operating Pressure Maximum	**830**	**120**	**8.3**
Operating Temperature Maximum:	52°C (125°F)		

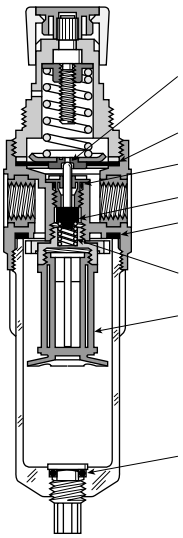

Installation

1. The equipment to which the FILTER / REGULATOR is attached should be internally cleaned to remove all traces of accumulated oil and dirt. Also, new pipe or hose should be installed between the filter and equipment being protected.
2. Blow all upstream pipe work clear of accumulated dirt and liquids.
3. Select a filter / regulator location as close as possible to the equipment being protected.
4. Install filter / regulator so that air flows in the direction of arrow on body.
5. Install filter / regulator vertically with the bowl drain mechanism at the bottom. Free moisture will thus drain into the sump "quiet zone" at the bottom of the bowl.
6. Gauge ports are located on both sides of the REGULATOR body for your convenience. It is necessary to install a gauge or socket pipe plugs into each port during installation.

⚠ WARNING

FAILURE OR IMPROPER SELECTION OR IMPROPER USE OF THE PRODUCTS AND/OR SYSTEMS DESCRIBED HEREIN OR RELATED ITEMS CAN CAUSE DEATH, PERSONAL INJURY AND PROPERTY DAMAGE.

This document and other information from The Company, its subsidiaries and authorized distributors provide product and/or system options for further investigation by users having technical expertise. It is important that you analyze all aspects of your application, including consequences of any failure and review the information concerning the product or systems in the current product catalog. Due to the variety of operating conditions and applications for these products or systems, the user, through its own analysis and testing, is solely responsible for making the final selection of the products and systems and assuring that all performance, safety and warning requirements of the application are met.

The products described herein, including without limitation, product features, specifications, designs, availability and pricing, are subject to change by The Company and its subsidiaries at any time without notice.

EXTRA COPIES OF THESE INSTRUCTIONS ARE AVAILABLE FOR INCLUSION IN EQUIPMENT / MAINTENANCE MANUALS THAT UTILIZE THESE PRODUCTS. CONTACT YOUR LOCAL REPRESENTATIVE.

Operation & Service

1. Both free moisture and solids are removed automatically by the FILTER / REGULATOR.
2. Drain whenever water level in sump "quiet zone" reaches the lower baffle. Install Automatic Drain if bowl draining is frequent.
3. The filter element should be removed and replaced when the pressure differential across the filter is 10 PSIG.
4. To remove the filter element: SHUT AIR LINE DOWN and exhaust the primary and secondary pressure.
   a. Unscrew threaded bowl.
   b. Unscrew element and remove.
   c. Clean bowl and internal parts before reassembling.
   d. Attach clean element assembly and tighten firmly.
   e. Replace bowl gasket; lubricate gasket to assist in retaining it in position. Use only mineral base oils or grease. Do NOT use synthetic oils such as esters, and do NOT use silicones.
   f. Screw bowl into body and tighten firmly.
5. The regulator may be serviced without removing it from the line. Before disassembling FILTER / REGULATOR, SHUT OFF AIR SUPPLY AND EXHAUST PRIMARY AND SECONDARY PRESSURE. Disengage the adjusting knob by pulling upward. Turn the adjusting knob counterclockwise until compression is released from pressure control spring. For servicing diaphragm, unscrew bonnet from body. For servicing the poppet, remove threaded bowl and filter element assembly.
6. BEFORE TURNING ON AIR SUPPLY, TURN ADJUSTING KNOB COUNTERCLOCKWISE UNTIL COMPRESSION IS RELEASED FROM PRESSURE CONTROL SPRING. Turn on air pressure. Then proceed to adjust the desired downstream pressure by turning adjusting knob clockwise. This permits pressure to build up slowly in the downstream line.
7. To decrease regulated pressure settings, always reset from a pressure lower than then final setting required. Example, lowering the secondary pressure from 80 PSI to 60 PSI is best accomplished by dropping the secondary pressure to 50 PSI, then adjusting upward to 60 PSI.
8. When desired secondary pressure settings have been reached, push the adjusting knob down to lock.

Kits Available

Kit No.	Description
P3A-KA00RFN	Filter Repair Kit
P3A-KA00EEN	Element Kit (5 Micron)
P3A-KA00RRN	Relieving Diaphragm Kit
P3A-KA00RNN	Non-Relieving Diaphragm Kit

Pneumatic Division
Richland, Michigan 49083
269-629-5000

Installation & Service Instructions: 1R402F

Economy Regulators 1/4" Ports

ISSUED: May, 2012
Supersedes: July, 2008

Doc.# 1R402, EN# 120286, Rev. 12

⚠ WARNING

To avoid unpredictable system behavior that can cause personal injury and property damage:

- **Disconnect electrical supply (when necessary) before installation, servicing, or conversion.**
- **Disconnect air supply and depressurize all air lines connected to this product before installation, servicing, or conversion.**
- **Operate within the manufacturer's specified pressure, temperature, and other conditions listed in these instructions.**
- **Medium must be moisture-free if ambient temperature is below freezing.**
- **Service according to procedures listed in these instructions.**
- **Installation, service, and conversion of these products must be performed by knowledgeable personnel who understand how pneumatic products are to be applied.**
- **After installation, servicing, or conversion, air and electrical supplies (when necessary) should be connected and the product tested for proper function and leakage. If audible leakage is present, or the product does not operate properly, do not put into use.**
- **Warnings and specifications on the product should not be covered by paint, etc. If masking is not possible, contact your local representative for replacement labels.**

Safety Guide

For more complete information on recommended application guidelines, see the Safety Guide section of Pneumatic Division catalogs or you can download the **Pneumatic Division Safety Guide** at: www.parker.com/safety

⚠ WARNING

Product rupture can cause serious injury.
Do not connect regulator to bottled gas.
Do not exceed maximum primary pressure rating.

Introduction

Follow these instructions when installing, operating, or servicing the product.

Application Limits

These products are intended for use in general purpose compressed air systems only. Compliance with the rated pressure and temperature is necessary.

Maximum Operating (Inlet) Pressure:	**kPa**	**PSIG**	**bar**
Mini Regulator (Plastic Body)	827	120	8.32
Economy Regulator (Metal Body)	1720	250	17.2

Ambient Temperature Range: 0°C to 52°C (32°F to 125°F)

Symbol

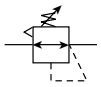

Economy Regulator
Relieving

Installation

1. This unit should be installed with reasonable accessibility for service whenever possible - repair service kits are available. Keep pipe and tubing lengths to a minimum with inside clean and free of dirt and chips. Pipe joint compounds should be used sparingly and applied only to the male pipe - never into the female port. Do not use PTFE tape to seal pipe joints - pieces have a tendency to break off and lodge inside the unit, possibly causing malfunction.
2. Install unit so that air flow is in the direction of arrow. Installation must be upstream of and close to devices it is to service (valve, cylinder, tool etc.) Mounting of Regulators may be in any position.
3. Gauge ports are located on both sides of the regulator body for your convenience. It is necessary to install a gauge or pipe plug into each port during installation.
4. To protect Regulator units against rust, pipe scale, and other foreign matter, install a filter on the upstream (high pressure) side as close to the regulator as possible.

⚠ **Caution: For proper assembly of units having plastic bodies, fittings must be installed hand-tight and then tightened by wrench 1/2 turn. To prevent leakage past threads, apply thread sealant to fitting. Prestolok fittings are recommended. Use of hard pipe is <u>not</u> recommended.**

EXCESSIVE TURNING OF FITTINGS BY WRENCH MAY RESULT IN PERMANENT DAMAGE AND RENDER THE REGULATOR INOPERABLE.

Operation of Regulator

1. Before turning on air supply, turn adjusting handle counterclockwise until compression is released from control spring. Then turn on air supply and adjust regulator to desired secondary pressure by turning adjusting handle clockwise. This permits pressure to build up slowly, preventing any unexpected operation of the valve, cylinders, tools, etc., attached to the line. Adjustment to desired secondary pressure can be made only with primary pressure applied to the regulator.
2. To decrease regulator pressure setting, always reset from a pressure lower than the final setting desired. For example, lowering the secondary pressure from 550 to 410 kPa (80 to 60 PSIG) is best accomplished by dropping the secondary pressure to 350 kPa (50 PSIG), then adjusting upward to 410 kPa (60 PSIG).

Service

⚠ **Caution: SHUT OFF AIR SUPPLY and exhaust the primary and secondary pressure before disassembling unit. (Units may be serviced without removing them from the air line.)**

Servicing Regulator:

Note: See Figure 1 to aid with this procedure.

1. Unlock the adjusting knob by pulling upward (with the unit in an upright position.) Then turn adjusting knob counterclockwise until compression of the control spring has been removed.
2. Remove the bonnet from body. Then remove o-ring (3), piston, lip seal (5), and control spring (8) to service the bonnet subassembly. Unscrew seat (4) to service the poppet (13), return spring (1), and / or poppet seal (2), o-rings (16 & 18), and washer (17).
3. Clean old grease from unit and inspect seals for sign of wear (nicks, cuts, and scratches). Repair kits are available which contain the parts which are typically replaced.

⚠ WARNING

FAILURE OR IMPROPER SELECTION OR IMPROPER USE OF THE PRODUCTS AND/OR SYSTEMS DESCRIBED HEREIN OR RELATED ITEMS CAN CAUSE DEATH, PERSONAL INJURY AND PROPERTY DAMAGE.

This document and other information from The Company, its subsidiaries and authorized distributors provide product and/or system options for further investigation by users having technical expertise. It is important that you analyze all aspects of your application, including consequences of any failure and review the information concerning the product or systems in the current product catalog. Due to the variety of operating conditions and applications for these products or systems, the user, through its own analysis and testing, is solely responsible for making the final selection of the products and systems and assuring that all performance, safety and warning requirements of the application are met.

The products described herein, including without limitation, product features, specifications, designs, availability and pricing, are subject to change by The Company and its subsidiaries at any time without notice.

EXTRA COPIES OF THESE INSTRUCTIONS ARE AVAILABLE FOR INCLUSION IN EQUIPMENT / MAINTENANCE MANUALS THAT UTILIZE THESE PRODUCTS. CONTACT YOUR LOCAL REPRESENTATIVE.

4. Apply a light film of grease to all seals and sliding surfaces using the grease packet supplied with repair kit.

Note: Refer to Figure 1 to determine the correct position and orientation of the various parts during assembly.

5. Gently and firmly press vent seal into piston using a blunt instrument.
6. Install lip seal onto piston with the lips of the seal facing away from the support flange. Then insert control spring and piston assembly into bonnet.
7. Place balancing o-ring (18) and washer (17) into body's bore. Then insert poppet return spring and poppet assembly, followed by seat o-ring (16) and seat.
8. Tighten seat from 0.6 to 0.8 Nm (5 to 7 in-lbs). Tighten bonnet onto body from 5.6 to 7.3 Nm (50 to 65 in-lbs) of torque.
9. Make sure that the control spring is still uncompressed before turning on the air supply. Turn on air supply, then slowly adjust the knob clockwise to increase downstream pressure until the desired pressure has been reached.
10. To decrease regulator pressure setting, always reset from a pressure lower than the final setting desired. For example, lowering the secondary pressure from 550 to 410 kPa (80 to 60 PSIG) is best accomplished by dropping the secondary pressure to 350 kPa (50 PSIG), then adjusting upward to 410 kPa (60 PSIG).
11. When the desired secondary pressure setting has been reached, push the adjusting knob down to lock it.
12. Check for leaks. If leaks occur, shut off the air supply, exhaust system air pressure, and make necessary adjustments to eliminate leakage.

Parts Identification List

Item#	Description
1	Poppet Return Spring
2	O-ring - body to bonnet
3	Seat
4	Lip Seal - piston to bonnet
5	Piston (relieving shown)
6	Control Spring
7	Knob
8	Hex Nut
9	Adjusting Screw
10	Bonnet Assembly
11	Poppet (Mini Regulator) and Poppet Assembly (Economy Regulator)
12	Body
13	Vent Seal - poppet assembly to piston (relieving units) (Economy Regulator)
14	O-ring - seat to body (Economy Regulator)

Service Kits Available

The following service kits contain the appropriate seals and parts necessary for ordinary field service.

Description	Economy Regulator
Bonnet Assembly	L01369
Mounting Bracket Kit* (plastic ring)	PS417B
Mounting Bracket Kit* (aluminum ring)	PS466
Panel Mount Nuts* Plastic Metal	 P78652 P01531
Piston & Poppet Kit - Unbalanced Non-Relieving	PS428
Piston & Poppet Kit - Unbalanced - Relieving	PS426
Poppet Kit - Unbalanced	PS454
Tamperproof Kit	P01265

*Tighten panel mount nut 2.8 to 3.4 Nm (25 to 30 in-lbs) of torque.

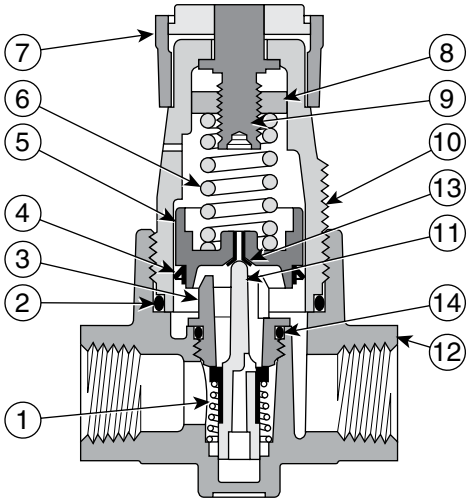

FIGURE 1: Economy Regulator -
(Balanced, Relieving Unit Shown)

Pneumatic Division
Richland, Michigan 49083
269-629-5000

Installation & Service Instructions
1R602
Miniature Filter / Regulator,
Miniature Regulators
1/8" and 1/4" Ports
ISSUED: July, 2008
Supersedes: March, 2008
Doc.# 1R602, EN# 080525, Rev. 7

⚠ WARNING

To avoid unpredictable system behavior that can cause personal injury and property damage:

- **Disconnect electrical supply (when necessary) before installation, servicing, or conversion.**
- **Disconnect air supply and depressurize all air lines connected to this product before installation, servicing, or conversion.**
- **Operate within the manufacturer's specified pressure, temperature, and other conditions listed in these instructions.**
- **Medium must be moisture-free if ambient temperature is below freezing.**
- **Service according to procedures listed in these instructions.**
- **Installation, service, and conversion of these products must be performed by knowledgeable personnel who understand how pneumatic products are to be applied.**
- **After installation, servicing, or conversion, air and electrical supplies (when necessary) should be connected and the product tested for proper function and leakage. If audible leakage is present, or the product does not operate properly, do not put into use.**
- **Warnings and specifications on the product should not be covered by paint, etc. If masking is not possible, contact your local representative for replacement labels.**

⚠ CAUTION

Polycarbonate bowls, being transparent and tough, are ideal for use with Filters and Lubricators. They are suitable for use in normal industrial environments, but should not be located in areas where they could be subjected to direct sunlight, an impact blow, nor temperatures outside of the rated range. As with most plastics, some chemicals can cause damage. Polycarbonate bowls should not be exposed to chlorinated hydrocarbons, ketones, esters and certain alcohols. They should not be used in air systems where compressors are lubricated with fire-resistant fluids such as phosphate ester and diester types.

Metal bowls are recommended where ambient and/or media conditions are not compatible with polycarbonate bowls. Metal bowls resist the action of most such solvents, but should not be used where strong acids or bases are present or in salt laden atmospheres. Consult the factory for specific recommendations where these conditions exist.

TO CLEAN POLYCARBONATE BOWLS USE MILD SOAP AND WATER ONLY! DO NOT use cleansing agents such as acetone, benzene, carbon tetrachloride, gasoline, toluene, etc., which are damaging to this plastic.

⚠ WARNING

To avoid polycarbonate bowl rupture that can cause personal injury or property damage, do not exceed bowl pressure or temperature ratings. Polycarbonate bowls have a 150 PSIG pressure rating and a maximum temperature rating of 125°F.

Safety Guide

For more complete information on recommended application guidelines, see the Safety Guide section of Pneumatic Division catalogs or you can download the **Pneumatic Division Safety Guide** at: www.parker.com/safety

Introduction

Follow these instructions when installing, operating, or servicing the product.

Application Limits

These products are intended for use in general purpose compressed air systems only.

Maximum Operating (Inlet) Pressure:	**kPa**	**PSIG**	**bar**
Miniature Filter / Regulator (with Plastic Bowl)	1030	150	10.3
Miniature Filter / Regulator (with Metal Bowl)	1720	250	17.2
Miniature Regulator (Metal Body)	2000	300	20.0

Ambient Temperature Range: 0°C to 52°C (32°F to 125°F)

Symbols

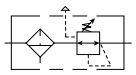

Miniature Filter / Regulator
Manual Drain Filter
(Relieving)

Miniature Regulators
(Relieving)

Installation

1. This unit should be installed with reasonable accessibility for service whenever possible - repair service kits are available. Keep pipe and tubing lengths to a minimum with inside clean and free of dirt and chips. Pipe joint compounds should be used sparingly and applied only to the male pipe - never into the female port. Do not use PTFE tape to seal pipe joints - pieces have a tendency to break off and lodge inside the unit, possibly causing malfunction.
2. Install unit so that air flow is in the direction of arrow. Installation must be upstream of and close to devices it is to service (valve, cylinder, tool etc.). Mounting of regulators may be in any position; mounting of filter/regulators must be vertical as shown in figure.
3. Gauge ports are located on both sides of the regulator body for your convenience. It is necessary to install a gauge or pipe plug into each port during installation.
4. To protect regulator units against rust, pipe scale, and other foreign matter, install a filter on the upstream (high pressure) side as close to the regulator as possible.

Operation of Regulator

1. Before turning on air supply, turn adjusting handle counterclockwise until compression is released from control spring. Then turn on air supply and adjust regulator to desired secondary pressure by turning adjusting handle clockwise. This permits pressure to build up slowly, preventing any unexpected operation of the valve, cylinders, tools, etc., attached to the line. Adjustment to desired secondary pressure can be made only with primary pressure applied to the regulator.
2. To decrease regulator pressure setting, always reset from a pressure lower than the final setting desired. For example, lowering the secondary pressure from 550 to 410 kPa (80 to 60 PSIG) is best accomplished by dropping the secondary pressure to 350 kPa (50 PSIG), then adjusting upward to 410 kPa (60 PSIG).

Operation of Filter / Regulator

1. Both free moisture and solids are removed automatically by the Filter / Regulator.
2. Manual drain filters must be drained regularly before the separated moisture and oil reaches the bottom of the element holder. Automatic drain models (pulse drain) will collect and dump liquids automatically. They are actuated when a pressure drop occurs within the filter.
3. The filter element should be removed and replaced when the pressure differential across the filter is excessive.

Service

⚠ **Caution: SHUT OFF AIR SUPPLY and exhaust the primary and secondary pressure before disassembling unit. (Units may be serviced without removing them from the air line.)**

⚠ WARNING

FAILURE OR IMPROPER SELECTION OR IMPROPER USE OF THE PRODUCTS AND/OR SYSTEMS DESCRIBED HEREIN OR RELATED ITEMS CAN CAUSE DEATH, PERSONAL INJURY AND PROPERTY DAMAGE.

This document and other information from The Company, its subsidiaries and authorized distributors provide product and/or system options for further investigation by users having technical expertise. It is important that you analyze all aspects of your application, including consequences of any failure and review the information concerning the product or systems in the current product catalog. Due to the variety of operating conditions and applications for these products or systems, the user, through its own analysis and testing, is solely responsible for making the final selection of the products and systems and assuring that all performance, safety and warning requirements of the application are met.

The products described herein, including without limitation, product features, specifications, designs, availability and pricing, are subject to change by The Company and its subsidiaries at any time without notice.

EXTRA COPIES OF THESE INSTRUCTIONS ARE AVAILABLE FOR INCLUSION IN EQUIPMENT / MAINTENANCE MANUALS THAT UTILIZE THESE PRODUCTS. CONTACT YOUR LOCAL REPRESENTATIVE.

Servicing Regulator:

Note: See Figure 1, 2, & 3 to aid with this procedure.

1. Unlock the adjusting knob by pulling upward (with the unit in an upright position.) Then turn adjusting knob counterclockwise until compression of the control spring has been removed.
2. Remove the bonnet from body. Then remove o-ring (7), piston, lip seal (9), and control spring to service the bonnet subassembly. Unscrew seat (8) to service the poppet (17), return spring (5), and /or poppet seal (6).

Note: On filter / regulator units, the poppet assembly & poppet return spring may be accessed by removing filter element.

3. Clean old grease from unit and inspect seals for sign of wear (nicks, cuts, and scratches). Repair kits are available which contain the parts which are typically replaced.
4. Apply a light film of grease to all seals and sliding surfaces using the grease packet supplied with repair kit.

Note: Refer to Figures to determine the correct position and orientation of the various parts during assembly.

5. Install lip seal onto piston with the lips of the seal facing away from the support flange. Then insert control spring and piston assembly into bonnet.
6. Place poppet return spring and poppet assembly into bore, followed by poppet seal and seat.
7. Tighten seat to body from 0.9 to 1.1 Nm (8 to 10 in-lbs) of torque. Tighten bonnet onto body from 5.6 to 7.3 Nm (50 to 65 in-lbs) of torque.
8. Make sure that the control spring is still uncompressed before turning on the air supply. Turn on air supply, then slowly adjust the knob clockwise to increase downstream pressure until the desired pressure has been reached.
9. To decrease regulator pressure setting, always reset from a pressure lower than the final setting desired. For example, lowering the secondary pressure from 550 to 410 kPa (80 to 60 PSIG) is best accomplished by dropping the secondary pressure to 350 kPa (50 PSIG), then adjusting upward to 410 kPa (60 PSIG).
10. When the desired secondary pressure setting has been reached, push the adjusting knob down to lock it.
11. Check for leaks. If leaks occur, shut off the air supply, exhaust system air pressure, and make necessary adjustments to eliminate leakage.

Servicing Filter Element:

Note: See Figure 1 to aid with this procedure.

1. Unscrew threaded bowl and element holder. Then remove filter element, deflector, and gaskets.
2. Clean all internal parts, bowl, and body before re-assembling unit. See Polycarbonate bowl cleaning section.
3. Install deflector, filter element, and gaskets.
4. Attach element holder. Torque 0.9 to 1.4 Nm (8 to 12 in-lbs).
5. To assist with retaining bowl's o-ring while installing bowl, lubricate the o-ring (with a mineral based oil or grease). Then place it on the bowl.
6. Screw bowl into body until it is stopped by body; then back off bowl 1/8 turn.
7. Apply pressure to the system and check for leaks. If leaks occur, shut off the air supply, de-pressurize the system and make necessary adjustments to eliminate leakage.

If you have questions concerning how to service this unit, contact your local authorized dealer or your customer service representative.

Parts Identification List

Item#	Description
1	Bowl (Miniature Filter Regulator)
2	Filter Element (Miniature Filter Regulator)
3	Deflector (Miniature Filter Regulator)
4	O-ring (Miniature Filter Regulator) - bowl to body
5	Poppet Return Spring
6	Poppet Seal
7	O-ring - body to bonnet
8	Seat
9	Lip Seal - piston to bonnet
10	O-ring - piston to poppet (Miniature Regulator & Filter / Regulator relieving units)
11	Piston (relieving shown)
12	Control Spring
13	Knob
14	Hex Nut
15	Adjusting Screw
16	Bonnet
17	Poppet (Miniature Regulator & Filter / Regulator)
18	Body
19	Gasket (Miniature Filter Regulator) - deflector to body
20	Gasket (Miniature Filter Regulator) - element holder to filter element
21	Element Holder (Miniature Filter Regulator)
22	O-ring (14E) - body to drain
23	Twist Drain (Miniature Filter Regulator)
24	Twist Drain Knob

Service Kits Available

The following service kits contain the appropriate seals and parts necessary for ordinary field service.

Description	Miniature Filter / Regulator	Miniature Regulator
Adsorber	PS452	PS452
5 Micron Element Kit	PS403	N/A
40 Micron Element Kit	PS401	N/A
Metal Bowl w/Manual Drain	PS447B	N/A
Metal Bowl w/Automatic Drain	PS451B	N/A
Mounting Bracket Kit* (plastic ring)	PS417B	PS417B
Mounting Bracket Kit* (aluminum ring)	PS466	PS466
Panel Mount Nut - Metal*	P01531	P01531
Piston & Poppet Kit - Unbal. Rel.	PS426	PS426
Piston & Poppet Kit - Unbal. Non-Rel	PS428	PS428
Polycarbonate Bowl w/Manual Drain	PS404	N/A
Polycarbonate Bowl w/Automatic Drain	PS408B	N/A
Springs: 1-30 PSIG Range	P01175	P01175
1-60 PSIG Range	P01174	P01174
2-125 PSIG Range	P01173	P01173
1-15 PSIG Range	P01176	P01176
Twist Drain Knob	P05117	

*Tighten panel mount nut 2.8 to 3.4 Nm (25 to 30 in-lbs) of torque.

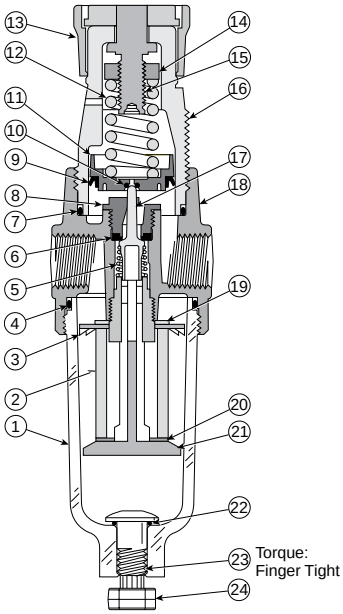

FIGURE 1: Miniature Filter / Regulator - Un-balanced, Relieving

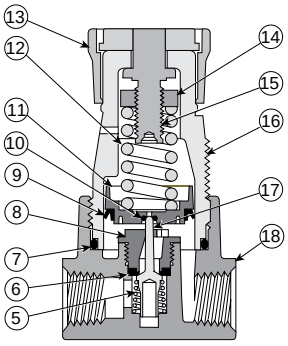

FIGURE 2: Miniature Regulator - Un-balanced, Relieving Unit Shown

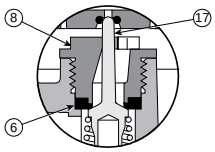

FIGURE 3: Detail of Poppet Seal

Pneumatic Division
Richland, Michigan 49083
269-629-5000

Instructions d'installation et d'entretien
1R602 (French)
Filtre-régulateur miniature, régulateurs miniatures avec des orifices de 1/8 in et 1/4 in
PUBLICATION: Juillet, 2008
Remplace: Mars, 2008
Doc.# 1R602, ECN# 080525, Rev. 7

⚠ AVERTISSEMENT

Afin d'éviter un fonctionnement imprévu du système pouvant occasionner des blessures aux personnes et des dommages matériels :

- **Débrancher l'alimentation électrique (si nécessaire) avant toute installation, entretien ou conversion.**
- **Débrancher l'alimentation en air et dépressuriser toutes les canalisations d'air connectées à cet appareil avant installation, entretien ou conversion.**
- **Utiliser l'appareil conformément aux normes de pression, température, et autres conditions spécifiées par le fabricant dans ces instructions.**
- **Le médium doit être exempt d'humidité si la température descend en dessous de 0°C.**
- **L'entretien doit se faire conformément aux procédures décrites ici.**
- **L'installation, l'entretien, et la conversion de ces appareils doivent être effectués par des personnels qualifiés, au fait des techniques pneumatiques.**
- **Après installation, entretien, ou conversion, les alimentations en air et en électricité (si nécessaire) seront connectées et l'appareil testé pour vérifier son fonctionnement correct et l'absence de fuites. Si l'appareil présente une fuite audible ou ne fonctionne pas correctement, ne pas l'utiliser.**
- **Les inscriptions concernant les avertissements et spécifications sur l'appareil ne devront pas être recouvertes de peinture, etc. Si le masquage est impossible, contactez votre représentant local pour des étiquettes de remplacement.**

SECURITE – Cuves transparentes

⚠ ATTENTION:

Les bols en polycarbonates, étant durs et transparents, sont idéaux pour l'utilisation dans les filtres et lubrificateurs. Ils conviennent aux environnements industriels normaux, mais ne devront pas être placés dans des endroits où ils pourraient être soumis à une exposition à la lumière directe du soleil, aux chocs, ou aux températures en-dehors de la plage normale d'utilisation. Ce plastique est, comme tout autre, susceptible d'être endommagé par l'action de certains produits chimiques. Les bols en polycarbonate ne doivent pas être exposés aux hydrocarbures chlorés, cétones, éthers, et certains alcools. Ils ne doivent pas être utilisés dans des systèmes pneumatiques dont les compresseurs sont lubrifiés par des fluides résistant au feu, tels que les esters et diesters de phosphate.

Les bols métalliques sont recommandés quand les conditions ambiantes et/ou celles du médium sont incompatibles avec les bols en polycarbonates. Les bols métalliques sont résistants à la plupart de ces solvants mais ne doivent pas être utilisés en milieu fortement acide ou basique, ou dans une atmosphère salée. Si de telles conditions existent, contactez le fabricant pour des recommandations spécifiques.

NETTOYEZ LES BOLS EN POLYCARBONATE UNIQUEMENT A L'EAU ET AU SAVON DOUX ! NE PAS utiliser d'agents nettoyants tels que l'acétone, le benzène, le tétrachlorure de carbone, l'essence, le toluène, etc., qui endommageraient ce plastique.

⚠ AVERTISSEMENT

Une rupture de l'appareil peut occasionner des blessures graves.
Ne pas utiliser ce régulateur pour du gaz en bouteille.
Ne pas dépasser la norme de pression primaire maximum.

Guide de sécurité

Pour obtenir de plus amples informations sur les directives à appliquer recommandées, prière de vous reporter à la section Guide de sécurité des catalogues de la Pneumatic Division ou de télécharger le Guide de sécurité de la Pneumatic Division sur le site: www.parker.com/safety

Introduction

Suivre ces instructions pendant l'installation, l'utilisation ou l'entretien du produit.

Limites d'utilisation

Ces produits sont construits pour utilisation uniquement dans les systèmes d'air comprimé pour service général.

Pression d'admission maximale de fonctionnement	**kPa**	**psi**	**bar**
Filtre-régulateur miniature (avec cuve en plastique)	1030	150	10,3
Filtre-régulateur miniature (avec cuve métallique)	1720	250	17,2
Régulateur miniature (corps métallique)	2000	300	20,0

Plage de température ambiante 0 °C à 52 °C (32 °F à 125 °F)

Symboles

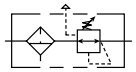

Filtre-régulateur miniature
Filtre à purge manuelle
(décharge)

Régulateurs miniatures
(décharge)

Installation

1. Il faut installer cet appareil dans un endroit raisonnablement accessible pour faciliter l'entretien. Un kit de réparation est offert. Les tuyaux et tubes doivent être aussi courts que possible et ils doivent être propres et sans saleté ni copeaux à l'intérieur. Il faut utiliser modérément la pâte à joint et l'appliquer uniquement sur le tuyau, jamais dans l'orifice. Il ne faut pas utiliser de ruban de PTFE pour assurer l'étanchéité des connexions de tuyaux. Les pièces ont tendance à se fracturer et se loger à l'intérieur de l'appareil, ce qui peut causer un mauvais fonctionnement.
2. Installer l'appareil pour que l'air circule dans la direction de la flèche. L'installation doit être en amont et aussi proche que possible de l'appareil qu'il faut protéger (vanne, vérin, outil, etc.). Le régulateur peut être monté dans n'importe quelle position. Le filtre-régulateur doit être monté verticalement, comme montré sur l'illustration.
3. Pour être plus pratique, un orifice de manomètre se trouve de chaque côté du corps du régulateur. Pendant l'installation, il est nécessaire d'installer un manomètre ou un bouchon de tuyau dans chaque orifice.
4. Pour protéger le régulateur de la rouille, la calamine et autres matières étrangères, installer un filtre en amont du régulateur, aussi proche que possible de celui-ci.

Utilisation du régulateur

1. Avant de mettre le système sous pression, tourner la poignée de réglage dans le sens inverse des aiguilles d'une montre jusqu'à l'élimination de toute la compression du ressort de commande de pression. Mettre le système sous pression et tourner la poignée dans le sens des aiguilles d'une montre pour régler le régulateur à la pression secondaire désirée. Ceci permet à la pression de monter lentement, évitant le fonctionnement inattendu de la vanne, des vérins, des outils, etc. montés sur la conduite. Il n'est possible de faire le réglage de la pression secondaire que si le régulateur est soumis à la pression primaire.
2. Pour réduire la pression du système, il faut toujours faire le réglage à partir d'une pression plus basse que la valeur désirée. Par exemple, pour abaisser la pression secondaire de 5,5 à 4,1 bar (550 à 410 kPa ; 80 à 60 psi), il est préférable de faire tomber la pression secondaire à 3,5 bar (350 kPa ; 50 psi) et de la régler, en montant à 4,1 bar (410 kPa ; 60 psi).

Utilisation du filtre et régulateur

1. L'humidité libre et les solides sont éliminés automatiquement par le filtre et régulateur.
2. Il faut purger régulièrement les filtres à purge manuelle avant que la condensation et l'huile condensée atteignent le bas du support d'élément. Les modèles à purge automatique (purge à impulsions) captent et évacuent automatiquement les liquides. Ils sont actionnés par une chute de pression dans le filtre.

⚠ AVERTISSEMENT

LA DEFAILLANCE, LE CHOIX ERRONE OU L'USAGE NON CONFORME DES PRODUITS ET/OU SYSTEMES ICI DECRITS, OU PRODUITS Y AFFERANT, PEUVENT ENTRAINER LA MORT, DES BLESSURES AUX PERSONNES ET DES DOMMAGES MATERIELS.

Ce document et autres informations de « The Company », ses filiales et distributeurs autorisés offre des options complémentaires d'utilisation du produit et/ou système pour des utilisateurs ayant l'expertise technique requise. Il est important que vous analysiez tous les aspects de l'usage prévu, y compris les conséquences de toute défaillance, et que vous passiez en revue les informations concernant les produits et systèmes dans le catalogue actuel des produits. En raison de la diversité des conditions de fonctionnement et d'utilisation de ces produits ou systèmes, l'utilisateur, et lui seul, selon ses propres analyses et tests, porte la responsabilité du choix final des produits et systèmes. Il est aussi de sa responsabilité pleine et entière de s'assurer que les produits soient utilisés conformément aux normes de sécurité et avertissements d'usage.

Les produits décrits ici, y compris, mais non exclusivement, les caractéristiques des produits, spécifications, aspects, disponibilité et prix, sont susceptibles de modification à tout moment et sans préavis par « The Company » et ses filiales.

DES EXEMPLAIRES SUPPLEMENTAIRES DE CES INSTRUCTIONS SONT DISPONIBLES POUR ACCOMPAGNER LES APPAREILS/MANUELS D' ENTRETIEN CORRESPONDANT A CES PRODUITS. CONTACTEZ VOTRE REPRESENTANT LOCAL.

3. Il faut remplacer l'élément filtrant quand la différence de pression dans le filtre est excessive.

Entretien

⚠ **ATTENTION – COUPER L'ALIMENTATION D'AIR et évacuer la pression primaire et secondaire avant de démonter l'appareil. Il est possible de réparer ces appareils sans les déposer de la conduite d'air.**

Intervention sur le régulateur

Remarque : Consulter les figures 1, 2 et 3 pour aider avec cette procédure.

1. Lever le bouton de réglage pour le débloquer (quand l'appareil est en position verticale). Tourner ensuite le bouton de réglage dans le sens inverse des aiguilles d'une montre jusqu'à l'élimination de toute la compression du ressort de commande.
2. Déposer le chapeau du corps. Déposer ensuite le joint torique (7), le piston, le joint à lèvre (9) et le ressort de commande pour réparer le sous-ensemble du chapeau. Dévisser le siège (8) pour atteindre le clapet (17), le ressort de rappel (5) et le siège du clapet (6).

Remarque : Sur les filtres-régulateurs, il est possible de déposer l'élément filtrant pour obtenir accès au clapet et au ressort de rappel du clapet.

3. Nettoyer l'ancienne graisse et vérifier s'il y a des signes d'usure sur les joints (entailles, coupures ou rayures). Des kits de réparation contenant les pièces typiquement remplacées sont offerts.
4. Appliquer une pellicule de graisse sur tous les joints et surfaces coulissantes, en utilisant le paquet de graisse fourni avec le kit de réparation.

Remarque : Pendant le remontage, consulter les illustrations pour déterminer la position et l'orientation des diverses pièces.

5. Installer le joint à lèvres sur le piston, les lèvres du joint à l'opposé de la bride de support. Insérer ensuite le ressort de commande et le piston dans le chapeau.
6. Mettre le ressort de rappel du clapet et le clapet dans l'alésage, puis le joint du clapet et le siège.
7. Serrer le siège dans le corps à un couple de 0,9 à 1,1 Nm (8 à 10 in-lb). Serrer le chapeau sur le corps à un couple de 5,6 à 7,3 Nm (50 à 65 in-lb).
8. Avant de mettre le système sous pression, vérifier que le ressort de commande n'est pas comprimé. Mettre le système sous pression et tourner le bouton dans le sens des aiguilles d'une montre pour faire monter la pression en aval jusqu'à la pression désirée.
9. Pour réduire la pression du système, il faut toujours faire le réglage à partir d'une pression plus basse que la valeur désirée. Par exemple, pour abaisser la pression secondaire de 5,5 à 4,1 bar (550 à 410 kPa ; 80 à 60 psi), il est préférable de faire tomber la pression secondaire à 3,5 bar (350 kPa ; 50 psi) et de la régler, en montant à 4,1 bar (410 kPa ; 60 psi).
10. Quand la pression secondaire désirée est atteinte, enfoncer le bouton de réglage pour le verrouiller.
11. Vérifier qu'il n'y a pas de fuites. S'il y a des fuites, couper l'alimentation d'air, faire tomber la pression du système et faire les réglages nécessaires pour éliminer les fuites.

Intervention sur l'élément filtrant

Remarque : Consulter la figure 1 pour aider avec cette procédure.

1. Dévisser la cuve filetée et le support d'élément. Déposer ensuite l'élément filtrant, le déflecteur et les joints.
2. Nettoyer toutes les pièces internes, la cuve et le corps avant de remonter l'appareil. Consulter la section de nettoyage de la cuve en polycarbonate.
3. Installer le déflecteur, l'élément filtrant et les joints.
4. Monter le support d'élément. Serrer à un couple de 0,9 à 1,4 Nm (8 à 12 in-lb).
5. Lubrifier le joint torique avec de l'huile minérale ou de la graisse pour faciliter l'installation du joint torique du dispositif de retenue pendant l'installation de la cuve. Le placer ensuite sur la cuve.
6. Visser la cuve à fond sur le corps et reculer la cuve d'un huitième de tour.
7. Mettre le système sous pression et vérifier qu'il n'y a pas de fuites. S'il y a des fuites, couper l'alimentation d'air, faire tomber la pression du système et faire les réglages nécessaires pour éliminer les fuites.

En cas de question sur l'intervention de l'appareil, contacter le distributeur local agrée ou le représentant technique.

Liste d'identification des pièces

N° de référence	Description
1	Cuve (filtre et régulateur miniature)
2	Elément filtrant (filtre-régulateur miniature)
3	Déflecteur (filtre-régulateur miniature)
4	Joint torique (filtre-régulateur miniature), entre la cuve et le corps
5	Ressort de rappel du clapet
6	Joint du clapet
7	Joint torique, entre le corps et le chapeau
8	Siège
9	Joint à lèvre, entre le piston et le chapeau
10	Joint torique, entre le piston et le clapet (dispositif d'évacuation du régulateur miniature et du filtre-régulateur)
11	Piston (avec évacuation montré)
12	Ressort de commande
13	Bouton
14	Ecrou six pans
15	Vis de réglage
16	Chapeau
17	Clapet (régulateur miniature et filtre-régulateur)
18	Corps
19	Joint (filtre-régulateur miniature), entre le déflecteur et le corps
20	Joint (filtre-régulateur miniature), entre le support d'élément et l'élément filtrant
21	Elément filtrant (filtre-régulateur miniature)
22	Joint torique (14E), entre le corps et la purge
23	Purge tournant (filtre-régulateur miniature)
24	Tordre le Bouton d'Egout

Kits d'intervention offerts

Les kit de réparation suivants contiennent les joints appropriés et les pièces nécessaires pour les réparations ordinaires sur place.

Description	Filtre-régulateur	Régulateur miniature
Elément absorbant	PS452	PS452
Kit d'élément de 5 microns	PS403	N/A
Kit d'élément de 40 microns	PS401	N/A
Cuve métallique avec purge manuelle	PS447B	N/A
Cuve métallique avec purge automatique	PS451B	N/A
Kit de patte de montage* (bague en plastique)	PS417B	PS417B
Kit de patte de montage* (bague en aluminium)	PS466	PS466
Ecrou métallique de montage sur le panneau*	P01531	P01531
Kit de piston et clapet, évacuation sans équilibre	PS426	PS426
Kit de piston et clapet, sans évacuation sans équilibre	PS428	PS428
Cuve en polycarbonate avec purge manuelle	PS404	N/A
Cuve en polycarbonate avec purge automatique	PS408B	N/A
Ressorts: Plage de 1 à 2,1 bar (1 à 30 psi)	P01175	P01175
Plage de 1 à 4,1 bar (1 à 60 psi)	P01174	P01174
Plage de 2 à 8,6 bar (2 à 125 psi)	P01173	P01173
Plage de 1 à 1,0 bar (1 à 15 psi)	P01176	P01176
Tordre le Bouton d'Egout	P05117	

*Serrer l'écrou de montage du panneau à un couple de 2,8 à 3,4 Nm (25 à 30 po/lb).

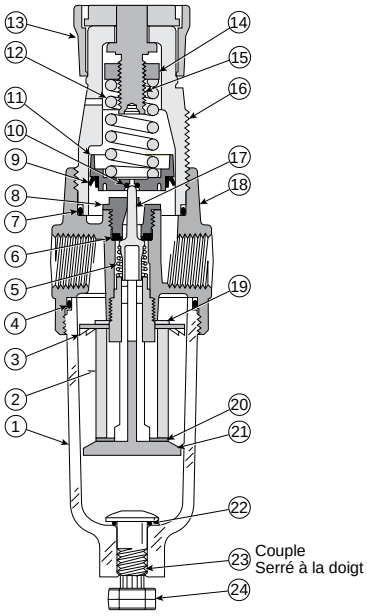

FIGURE 1 – Filtre et régulateur miniature, sans équilibre, avec évacuation

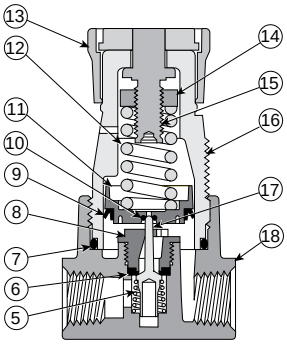

FIGURE 2 – Régulateur miniature, sans équilibre, avec dispositif d'évacuation montré

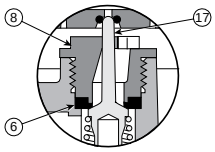

FIGURE 3 – Détail du joint de clapet

Pneumatic Division
Richland, Michigan 49083
269-629-5000

Instrucciones para instalación y servicio
1R602 (Spanish)
Filtros / reguladores en miniatura, reguladores en miniatura puertos de 1/8 y 1/4 de pulgada
EMITIDO: Julio, 2008
Sustituye a: Marzo, 2008
Doc.# 1R602, ECN# 080525, Rev. 7

⚠ ADVERTENCIA

Para evitar un comportamiento impredecible del sistema que pueda ocasionar lesiones personales y daños a la propiedad:

- **Antes de instalar, reparar o convertir, desconecte el suministro eléctrico (cuando sea necesario).**
- **Antes de instalar, reparar o convertir, desconecte el suministro de aire y despresurice todas las líneas de aire que están conectadas a este producto.**
- **Haga funcionar dentro de la presión, temperatura y demás condiciones especificadas por el fabricante y que se incluyen en estas instrucciones.**
- **El medio debe estar libre de humedad si la temperatura ambiente se encuentra por debajo del punto de congelación.**
- **Repare de acuerdo con los procedimientos que se incluyen en estas instrucciones.**
- **La instalación, reparación y conversión de estos productos debe ser realizada por personal competente que entienda la manera en que se deben aplicar los productos neumáticos.**
- **Después de la instalación, reparación y conversión, se debe conectar los suministros eléctricos y de aire (cuando sea necesario), y el producto se debe poner a prueba para determinar que funciona correctamente y no tiene pérdidas. Si se detecta una pérdida audible, o si el producto no funciona correctamente, no lo ponga en funcionamiento.**
- **Las advertencias y especificaciones que aparecen en el producto no deben estar cubiertas por pintura, etc. Si no resulta posible colocarlo con cinta adhesiva, póngase en contacto con su representante local para obtener etiquetas de repuesto.**

La Seguridad: Las Tazas Transparentes

⚠ PRECAUCIÓN:

Las tazas de policarbonato, al ser transparentes y resistentes, son ideales para usar con Filtros y Lubricadores. Son aptas para usar en ambientes industriales normales, pero no se deben ubicar en zonas en donde queden expuestas a luz solar directa, un golpe de impacto, o una temperatura por fuera de su clasificación. Al igual que con la mayoría de los plásticos, ciertos productos químicos pueden ocasionar daños. No se debe exponer las tazas de policarbonatos a los hidrocarburos clorinados, las cetonas, los ésteres y ciertos alcoholes. No se los debe usar en sistemas de aire en donde se lubrica los compresores de aire usando fluidos resistentes al fuego tal como los tipos de ester fosfato y di-ester.

Se recomienda el uso de tazas de metal cuando las condiciones ambientales y del medio no son compatibles con las tazas de policarbonato. Las tazas de metal son resistentes a la acción de la mayoría de esos solventes, pero no deben usarse cuando existe la presencia de ácidos o bases fuertes, ni en atmósferas cargadas de sal. Consulte con la fábrica por recomendaciones específicas para cuando existen estas condiciones.

PARA LIMPIAR LAS TAZAS DE POLICARBONATO, UTILICE SOLAMENTE UN JABÓN SUAVE Y AGUA. NO use agentes de limpieza tales como la acetona, el benceno, el tetracloruro de carbono, la gasolina o el tolueno, etc., que pueden dañar este plástico.

⚠ ADVERTENCIA

La ruptura del producto puede ocasionar lesiones graves.
No conecte el regulador al gas embotellado.
No exceda la clasificación de presión primaria máxima.

Guía sobre la seguridad

Para obtener información más completa acerca de los lineamientos recomendados acerca del uso, vea la sección Guía sobre la seguridad en los catálogos de la división neumática o puede bajar la Guía sobre la Seguridad de la División Neumática (Pneumatic Division Safety Guide) en www.parker.com/safety

Introducción

Observe las siguientes instrucciones al instalar, operar o dar servicio al producto.

Límites de aplicación

Estos productos han sido diseñados para usarse solamente en sistemas de aire comprimido para propósitos generales.

Máxima presión (de entrada) para funcionamiento	**kPa**	**PSIG**	**barras**
Filtro / regulador en miniatura (con tazón plástico)	1030	150	10,3
Filtro / regulador en miniatura (con tazón de metal)	1720	250	17,2
Regulador en miniatura (cuerpo de metal)	2000	300	20,0

Rango de temperatura ambiental: 0°C a 52°C (32°F a 125°F)

Símbolos

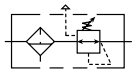

Filtro / regulador en miniatura
Filtro con drenaje manual
(con descarga)

Reguladores en miniatura
(con descarga)

Instalación

1. Siempre que sea posible, al instalar estas unidades se les debe colocar en lugares de fácil acceso, para poder darles servicio. Hay disponibles juegos de servicio para reparación. Se deben usar tuberías o conductos tan cortos como sea posible, manteniendo su interior limpio y sin desechos o astillas. Los compuestos para unir tuberías deben usarse moderadamente y se les debe aplicar a las tuberías macho solamente, nunca a los puertos hembra. No use cinta PTFE para sellar las junturas de tuberías ya que algunas veces pedazos de cinta tienden a separarse y fijarse dentro de las unidades provocando posiblemente mal funcionamiento.
2. Instale las unidades de manera que el flujo de aire ocurra en la dirección de las flechas. La instalación se debe hacer flujo arriba y cerca de los dispositivos que han de servir (válvulas, cilindros, herramientas, etc.). Los reguladores pueden montarse en cualquier posición; los filtros / reguladores deben montarse verticalmente tal y como se muestra en la figura.
3. Para su conveniencia, hay puertos para medidores en ambos lados de los cuerpos de los reguladores. Al hacer la instalación, es necesario colocar un medidor o un tapón de casquillo en cada uno de esos puertos.
4. Instale filtros en el lado flujo arriba (alta presión) tan cerca a los reguladores como sea posible para protegerlos contra el moho, las escamas de las tuberías y otros materiales extraños.

Funcionamiento de los reguladores

1. Antes de activar el suministro de aire, gire la manija para ajuste en contra de las agujas del reloj hasta liberar la compresión del muelle para control. Luego active el suministro de aire y ajuste el regulador a la presión secundaria deseada girando la manija en el sentido de las agujas del reloj. Con esto se permite que la presión se acumule lentamente, evitando todo funcionamiento inesperado de las válvulas, cilindros, herramientas, etc. unidas a la línea. Sólo se puede ajustar la presión secundaria deseada cuando hay presión principal aplicada al regulador.
2. Para disminuir la graduación de la presión del regulador, comience siempre con una presión menor que la graduación final deseada. Por ejemplo, para reducir la presión secundaria de 550 a 410 kPa (80 a 60 psig) lo mejor es reducir la presión secundaria a 350 kPa (50 psig), y luego aumentarla a 410 kPa (60 psig).

Funcionamiento de los filtros / reguladores

1. Los filtros / reguladores eliminan automáticamente tanto la humedad libre como los sólidos.
2. Se deben drenar regularmente los filtros con drenaje manual antes de que la humedad y el aceite desalojados lleguen a la parte baja del soporte

⚠ ADVERTENCIA

EL FALLO O LA SELECCIÓN INCORRECTA O EL USO INCORRECTO DE LOS PRODUCTOS Y/O SISTEMAS AQUÍ DESCRITOS U OTROS ARTÍCULOS RELACIONADOS PUEDE RESULTAR EN MUERTE, LESIONES PERSONALES Y DAÑO A LA PROPIEDAD.

Este documento y demás información de la compañía, sus subsidiarias y distribuidores autorizados ofrecen opciones de productos y sistemas para mayor investigación por parte de los usuarios que cuentan con conocimientos técnicos. Es importante que analice todos los aspectos de su aplicación, incluyendo las consecuencias de cualquier fallo y que revise la información concerniente al producto o los sistemas que se encuentran en el catálogo actual de productos. Debido a la variedad de condiciones de funcionamiento y aplicaciones para estos productos o sistemas, el usuario, mediante su propio análisis y pruebas, es únicamente responsable por la selección final de los productos y sistemas, y por garantizar que se cumpla con todos los requisitos de funcionamiento, seguridad y advertencia de la aplicación.

Los productos aquí descritos, incluyendo pero sin limitarse, a las características del producto, las especificaciones, los diseños, la disponibilidad y los precios, están sujetos a cambios por parte de la compañía y de sus subsidiarias en cualquier momento sin aviso.

SE PUEDE OBTENER COPIAS ADICIONALES DE ESTAS INSTRUCCIONES PARA INCLUIR CON EL EQUIPO / LOS MANUALES DE MANTENIMIENTO QUE UTILIZAN ESTOS PRODUCTOS. COMUNIQUESE CON SU REPRESENTANTE LOCAL.

del elemento. Los modelos con drenaje automático (drenaje por pulsos) recolectan y desechan los líquidos automáticamente. Se activan cuando hay una caída de presión dentro del filtro.

3. Se deben quitar y reemplazar los elementos de los filtros cuando la presión diferencial a través de ellos sea excesiva.

Servicio

⚠ **PRECAUCIÓN: Antes de desarmar la unidad, DESACTIVE EL SUMINISTRO DE AIRE y elimine la presión principal y secundaria. (Se puede dar servicio a las unidades sin quitarlas de la línea.)**

Cómo dar servicio a los reguladores:

Nota: Para auxiliarse en este procedimiento, vea las figuras 1, 2 y 3.

1. Destrabe la perilla de ajuste tirando de ella hacia arriba (con la unidad en posición vertical). Luego gire la perilla para ajuste en el sentido contrario a las agujas del reloj, hasta eliminar la compresión del muelle de control.
2. Quite el bonete del cuerpo. Después quite el aro tórico (7), el pistón, el sello con labios (9) y el muelle para control para dar servicio al bonete. Desenrosque el asiento (8) para dar servicio al obturador (17), el muelle para retorno (5) y/o el sello del obturador (6).

Nota: En las unidades de filtros / reguladores, se puede obtener acceso al conjunto de obturador y al muelle para retorno del obturador quitando los elementos de los filtros.

3. Quite la grasa vieja de la unidad y verifique que los sellos no estén desgastados (mellados, cortados o rayados). Se encuentran disponibles juegos para reparación que contienen las piezas de repuesto más comúnmente utilizadas.
4. Coloque una película ligera de grasa en los sellos y las superficies deslizantes usando el paquete de grasa que se suministra con el juego para reparación.

Nota: Vea las figuras para averiguar la posición y orientación correctas de las piezas durante el ensamblaje.

5. Coloque el sello con labios en el pistón con los labios del sello hacia afuera del borde para soporte. Luego introduzca en el bonete el conjunto de muelle para control y pistón.
6. Coloque en el hueco el conjunto de muelle para retorno del obturador y el obturador, seguido del sello y el asiento del obturador.
7. Apriete el asiento al cuerpo con una torsión de 0,9 a 1,1 Nm (8 a 10 libras pulgada). Apriete el bonete al cuerpo con una torsión de 5,6 a 7,3 Nm (50 a 65 libras pulgada).
8. Antes de activar el suministro de aire asegúrese de que el muelle para control está todavía sin compresión. Active el suministro de aire, luego gire lentamente la perilla en el sentido de las agujas del reloj para aumentar la presión flujo abajo hasta alcanzar la deseada.
9. Para disminuir la graduación de la presión del regulador, comience siempre con una presión menor que la graduación final deseada. Por ejemplo, para reducir la presión secundaria de 550 a 410 kPa (80 a 60 psig) lo mejor es reducir la presión secundaria a 350 kPa (50 psig), y luego aumentarla a 410 kPa (60 psig).
10. Al alcanzar la presión secundaria deseada, presione la perilla para ajuste hacia abajo para fijarla.
11. Verifique que no hay fugas. Si las hay, desactive el suministro de aire, saque la presión de aire del sistema y haga los ajustes necesarios para eliminarlas.

Cómo dar servicio al elemento del filtro:

Nota: Para auxiliarse en este procedimiento, vea la Figura 1.

1. Desenrosque el tazón y el soporte del elemento. Después saque el elemento del filtro, el desviador y los empaques.
2. Antes de ensamblar de nuevo la unidad, limpie las piezas internas y el cuerpo. Vea la sección acerca de la limpieza de los tazones de policarbonato.
3. Coloque el desviador, el elemento del filtro y los empaques.
4. Coloque el soporte del elemento. Aplique una torsión de 0,9 a 1,4 Nm (8 a 12 libras pulgada).
5. Lubrique el aro tórico (con aceite o grasa de base mineral) para ayudar a retener el aro tórico del tazón durante el ensamblaje. Luego colóquelo en el tazón.
6. Enrosque el tazón en el cuerpo hasta que haga contacto con él; luego regréselo 1/8 de revolución.
7. Presurice el sistema y verifique que no tenga fugas. Si las hay, desactive el suministro de aire, saque la presión del sistema y haga los ajustes necesarios para eliminarlas.

Si tiene alguna pregunta acerca de cómo dar servicio a esta unidad, póngase en contacto con el concesionario autorizado de su localidad o con el representante de servicio al cliente.

Lista para Identificación de Piezas

Artículo #	Descripción
1	Tazón (filtro regulador en miniatura)
2	Elemento de filtro (filtro regulador en miniatura)
3	Desviador (filtro regulador en miniatura)
4	Aro tórico (filtro regulador en miniatura) - tazón a cuerpo
5	Muelle para retorno del obturador
6	Sello del obturador
7	Aro tórico - cuerpo a bonete
8	Asiento
9	Sello con labios - pistón a bonete
10	Aro tórico - pistón a obturador (unidades con descarga, reguladores en miniatura y filtros reguladores en miniatura)
11	Pistón (se muestra uno con descarga)
12	Muelle para control
13	Perilla
14	Tuerca hexagonal
15	Tornillo para ajuste
16	Bonete
17	Obturador (regulador y filtro regulador en miniatura)
18	Cuerpo
19	Empaque (filtro regulador en miniatura) - desviador a cuerpo
20	Empaque (filtro regulador en miniatura) - soporte del elemento a elemento del filtro
21	Soporte del elemento (filtro regulador en miniatura)
22	Aro tórico (14E) - cuerpo a drenaje
23	Drenaje de giro (filtro regulador en miniatura)
24	Tuerza la Perilla del Desaguadero

Juegos para servicio disponibles.

Los siguientes juegos para servicio contienen los sellos apropiados y las piezas necesarias para dar servicio corriente en el campo.

Description	Filtros / reguladores en miniatura	Reguladores en miniatura
Extractor	PS452	PS452
Juego de elemento de 5 micrones	PS403	N/A
Juego de elemento de 40 micrones	PS401	N/A
Tazón de metal con drenaje manual	PS447B	N/A
Tazón de metal con drenaje automático	PS451B	N/A
Juego de soporte para montaje* (anillo plástico)	PS417B	PS417B
Juego de soporte para montaje* (anillo de aluminio)	PS466	PS466
Tuerca para montaje en tablero, de metal*	P01531	P01531
Juego de pistón y obturador, sin balance, con descarga.	PS426	PS426
Juego de pistón y obturador, sin balance, sin descarga	PS428	PS428
Tazón de policarbonato con drenaje manual	PS404	N/A
Tazón de policarbonato con drenaje automático	PS408B	N/A
Muelles: Rango de 1 a 30 PSIG Rango de 1 a 60 PSIG Rango de 2 a 125 PSIG Rango de 1 a 15 PSIG	P01175 P01174 P01173 P01176	P01175 P01174 P01173 P01176
Tuerza la Perilla del Desaguadero	P05117	

*Apriete la tuerca de soporte del tablero de 2.8 a 3.4 Nm (Newtons por metro) (25 a 30 pulgadas por libra [63.5 cm. a 76.2 cm. por Kg.]) del par de torsión.

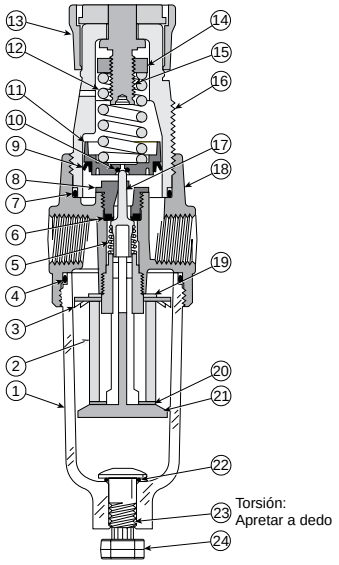

FIGURA 1: Filtro / regulador en miniatura - sin balance, con descarga

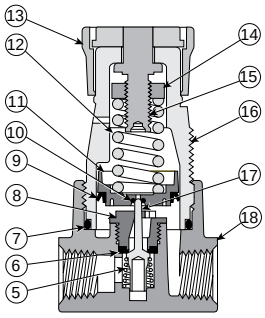

FIGURA 2: Regulador en miniatura - se muestra unidad sin balance, con descarga

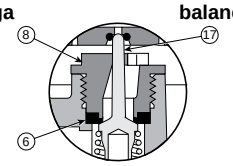

FIGURA 3: Detalle del sello del obturador

Pneumatic Division
Richland, Michigan 49083
269-629-5000

Installation and Service Instructions
2FR100G

1/4" & 3/8" Economy
1/4", 3/8" & 1/2" Compact
1/2" & 3/4" Standard
1/2" & 3/4" Standard Coalescing
1/4" & 3/8" Precision

ISSUED: September, 2012
Supersedes: September, 2006
Doc.# 2R101, EN# 120039, Rev. 12

⚠ WARNING

To avoid unpredictable system behavior that can cause personal injury and property damage:

- **Disconnect electrical supply (when necessary) before installation, servicing, or conversion.**
- **Disconnect air supply and depressurize all air lines connected to this product before installation, servicing, or conversion.**
- **Operate within the manufacturer's specified pressure, temperature, and other conditions listed in these instructions.**
- **Medium must be moisture-free if ambient temperature is below freezing.**
- **Service according to procedures listed in these instructions.**
- **Installation, service, and conversion of these products must be performed by knowledgeable personnel who understand how pneumatic products are to be applied.**
- **After installation, servicing, or conversion, air and electrical supplies (when necessary) should be connected and the product tested for proper function and leakage. If audible leakage is present, or the product does not operate properly, do not put into use.**
- **Warnings and specifications on the product should not be covered by paint, etc. If masking is not possible, contact your local representative for replacement labels.**

⚠ WARNING

Product rupture can cause serious injury.
Do not connect regulator to bottled gas.
Do not exceed maximum primary pressure rating.

Safety Guide

For more complete information on recommended application guidelines, see the Safety Guide section of Pneumatic Division catalogs or you can download the **Pneumatic Division Safety Guide** at: www.parker.com/safety

Safety: Polycarbonate Bowls

⚠ CAUTION

Polycarbonate bowls, being transparent and tough, are ideal for use with Filters and Lubricators. They are suitable for use in normal industrial environments, but should not be located in areas where they could be subjected to direct sunlight, an impact blow, nor temperatures outside of the rated range. As with most plastics, some chemicals can cause damage. Polycarbonate bowls should not be exposed to chlorinated hydrocarbons, ketones, esters and certain alcohols. They should not be used in air systems where compressors are lubricated with fire-resistant fluids such as phosphate ester and di-ester types.

Metal bowls are recommended where ambient and/or media conditions are not compatible with polycarbonate bowls. Metal bowls resist the action of most such solvents, but should not be used where strong acids or bases are present or in salt laden atmospheres. Consult the factory for specific recommendations where these conditions exist.

TO CLEAN POLYCARBONATE BOWLS USE MILD SOAP AND WATER ONLY! DO NOT use cleansing agents such as acetone, benzene, carbon tetrachloride, gasoline, toluene, etc., which are damaging to this plastic.

Bowl guards are recommended for added protection of polycarbonate bowls where chemical attack may occur.

⚠ WARNING

To avoid polycarbonate bowl rupture that can cause personal injury or property damage, do not exceed bowl pressure of temperature ratings. Polycarbonate bowls have a 150 PSIG (1030 kPa) pressure rating and a maximum temperature rating of 52°C (125°F).

Introduction

Follow these instructions when installing, operating, or servicing the product.

Application Limits

These products are intended for use in general purpose compressed air systems only.

With Polycarbonate Bowl

	kPa	PSIG	bar
Operating Pressure Maximum	**1000**	**150**	**10.3**
Operating Temperature Maximum		52°C (125°F)	
Operating Temperature Minimum		0°C (32°F)	

With Metal Bowl

	kPa	PSIG	bar
Operating Pressure Maximum	**1700**	**250**	**17.0**
Operating Temperature Maximum		80°C (175°F)	
Operating Temperature Minimum		0°C (32°F)	

Economy Series with Metal Bowl and Auto Drain

	kPa	PSIG	bar
Operating Pressure Maximum	**1000**	**150**	**10.3**
Operating Temperature Maximum		80°C (175°F)	
Operating Temperature Minimum		0°C (32°F)	

Note: The maximum recommended pressure drop for a particulate filter is 70 kPa (10 PSIG, 0.7 bar)

Symbols

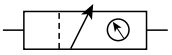

Economy, Compact Standard, Precision Filter / Regulator

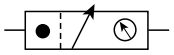

Standard Filter / Regulator (Coalescing Element)

Installation

1. The Filter / Regulator should be installed with reasonable accessibility for service whenever possible – repair service kits are available. Keep pipe or tubing lengths to a minimum with inside clean and free of dirt and chips. Pipe joint compound should be used sparingly and applied only to the male pipe – never into the female port. Do not use PTFE tape to seal pipe joints – pieces have a tendency to break off and lodge inside the unit, possibly causing malfunction. Also, new pipe or hose should be installed between the Filter / Regulator and equipment being protected.
2. The upstream pipe work must be clear of accumulated dirt and liquids.
3. Select a Filter / Regulator location as close as possible to the equipment being protected.
4. Install Filter / Regulator so that air flows in the direction of arrow on body.
5. Install Filter / Regulator vertically with the bowl drain mechanism at the bottom. Free moisture will thus drain into the sump ("quiet zone") at the bottom of the bowl.
6. Gauge ports are located on both sides of the filter/regulator body for your convenience. It is necessary to install a gauge or socket pipe plugs into each port during installation.

⚠ WARNING

FAILURE OR IMPROPER SELECTION OR IMPROPER USE OF THE PRODUCTS AND/OR SYSTEMS DESCRIBED HEREIN OR RELATED ITEMS CAN CAUSE DEATH, PERSONAL INJURY AND PROPERTY DAMAGE.

This document and other information from The Company, its subsidiaries and authorized distributors provide product and/or system options for further investigation by users having technical expertise. It is important that you analyze all aspects of your application, including consequences of any failure and review the information concerning the product or systems in the current product catalog. Due to the variety of operating conditions and applications for these products or systems, the user, through its own analysis and testing, is solely responsible for making the final selection of the products and systems and assuring that all performance, safety and warning requirements of the application are met.

The products described herein, including without limitation, product features, specifications, designs, availability and pricing, are subject to change by The Company and its subsidiaries at any time without notice.

EXTRA COPIES OF THESE INSTRUCTIONS ARE AVAILABLE FOR INCLUSION IN EQUIPMENT / MAINTENANCE MANUALS THAT UTILIZE THESE PRODUCTS. CONTACT YOUR LOCAL REPRESENTATIVE.

Operation

1. Both free moisture and solids are removed automatically by the filter. Units with coalescing elements (e.g. Standard Coalescing series) also remove oil. For coalescing units, a 5 micrometer pre-filter is recommended to protect and prolong the life of the coalescent filter element.
2. Manual drain filters must be drained regularly before the separated moisture and oil reaches the bottom of the baffle or end cap.
3. The filter element should be removed and replaced when pressure differential across the filter is 69 kPa (10 PSIG).
4. Before turning on the air supply, turn the knob counterclockwise until compression is released from the pressure control spring. Then turn knob clockwise and adjust regulator to desired downstream pressure. This permits pressure to build up slowly in the downstream line.
5. To decrease regulated pressure settings, always reset from a pressure lower than the final setting required. Example, lowering the secondary pressure from 550 to 410 kPa (80 to 60 PSIG) is best accomplished by dropping the secondary pressure to 350 kPa (50 PSIG), then adjusting upward to 410 kPa (60 PSIG).
6. When desired secondary pressure settings have been reached, push the knob down to lock this pressure setting.

Service

⚠ **Caution: Disconnect or shut off air supply and exhaust the primary and secondary pressures before servicing unit. Turning the adjusting knob counterclockwise does not vent downstream pressure on non-relieving regulators. Downstream pressure must be vented before servicing regulator.**

Note: Grease packets are supplied with kits for lubrication of seals. Use only mineral based grease or oils. Do not use synthetic oils such as esters. Do not use silicones.

Note: After servicing unit, turn on air supply and adjust regulator to the desired downstream pressure. Check unit for leaks. If leakage occurs, do not operate - conduct repairs and retest.

Servicing Filter Element -

A. Economy, Compact, Standard & Precision Units (Refer to Figure 1.)

1. Unscrew the bottom threaded collar and remove bowl.
2. Unscrew the baffle and then remove element.
3. Clean all internal parts and bowl before reassembling. See polycarbonate bowl cleaning section. IMPORTANT: The Economy, Compact, Standard & Precision Filter / Regulators will not operate properly if the deflector (or rubber spacer if using an Compact adsorber) is not installed properly. The deflector (or rubber spacer) must be installed between the filter stem and the filter body.
4. Install new element.
5. Attach baffle and finger tighten firmly.
6. Replace bowl seal. Lightly lubricate new seal to assist with retaining it in position.
7. Install bowl into body and tighten collar; hand tight, plus 1/4 turn.

B. Standard Coalescing Units (Refer to Figure 2.)

1. Hold bowl collar stationary while unscrewing and removing bowl.
2. Unscrew end cap and then remove element. (Do not remove threaded rod.)
3. Clean all internal parts and bowl before reassembling.
4. Install new element.
5. Attach end cap and finger tighten firmly.
6. Replace bowl seal. Lightly lubricate new seal to assist with retaining it in position.
7. Thread bowl into collar; hand tighten until bowl stops against collar.

Servicing Regulator -

A. Economy, Compact, Standard & Precision Units - (Refer to Figure 1.)

1. Disengage the adjusting knob by pulling upward. Turn adjusting knob counterclockwise until the compression is released from the pressure control spring.
2. Remove the bonnet and bowl assemblies by unscrewing the two threaded collars.
3. Remove diaphragm assembly from bonnet assembly.
4. Remove filter stem, filter element, poppet assembly, poppet return spring, (seat) insert and its o-rings.
5. Clean and carefully inspect parts for wear or damage. If replacement is necessary, use parts from service kits. Clean bowl. See polycarbonate bowl cleaning section.
6. Lubricate o-ring and vee packing seals with grease found in service kits.
7. Install poppet return spring, poppet assembly, (seat) insert and its o-rings, and filter stem. IMPORTANT: The Economy, Compact, Standard & Precision Filter / Regulators will not operate properly if the deflector (or rubber spacer if using an Compact adsorber) is not installed properly. The deflector (or rubber spacer) must be installed between the filter stem and filter body.
8. Install filter element and firmly tighten baffle onto the filter stem.
9. Install diaphragm assembly into bonnet assembly. Assemble bonnet assembly to body and tighten threaded collar from 5.4 to 5.9 Nm (48 to 52 in-lbs).
10. Install bowl into body and tighten collar; hand tight, plus 1/4 turn.

B. 12E Units - (Refer to Figure 2.)

1. Disengage the adjusting knob by pulling upward. Turn adjusting knob counterclockwise until the compression is released from the pressure control spring.
2. Remove the bonnet assembly by unscrewing its threaded collar.
3. Remove the bottom collar and bowl as an integral unit. Note: The reverse flow adapter and element assembly should remain in proper alignment with the collar; they are held in place by the o-ring between the adapter and the collar.
4. Remove diaphragm assembly from bonnet assembly.
5. Remove poppet assembly, poppet return spring, (seat) insert and its o-rings.
6. Clean and carefully inspect parts for wear or damage. If replacement is necessary, use parts from service kits.
7. Lubricate o-ring and vee packing seals with grease found in service kits.
8. Install poppet return spring, poppet assembly, (seat) insert and its o-rings.
9. Install diaphragm assembly into bonnet assembly. Assemble bonnet assembly to body and tighten threaded collar from 5.4 to 5.9 Nm (48 to 52 in-lbs).
10. Install bottom collar and bowl subassembly into body. Tighten collar hand tight, plus 1/4 turn.

Maintenance Service Kits	Economy	Compact	Standard	Standard Coalescing	Precision
Element Kits					
5 Micron	PS902	PS702	PS802	N/A	PS902
40 Micron	PS901	PS701	PS801	N/A	PS901
Grade 6	N/A	N/A	N/A	PS884	N/A
Grade 10	N/A	N/A	N/A	PS885	N/A
Relieving Regulator Repair Kit	PS908	PS710	PS810	PS886	PS907
Non-Relieving Regulator Repair Kit	PS909	PS711	PS811	PS887	N/A

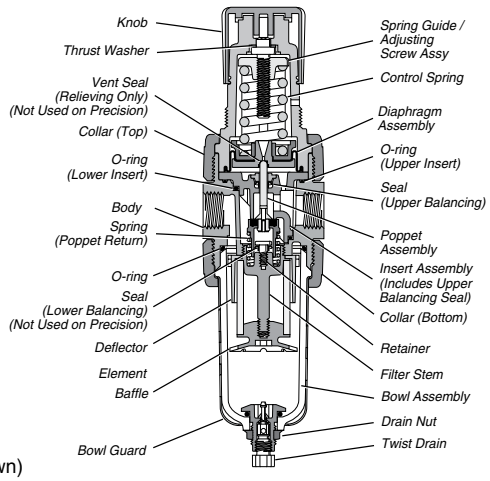

(06E Shown)

Figure 1: Economy, Compact, Standard & Precision

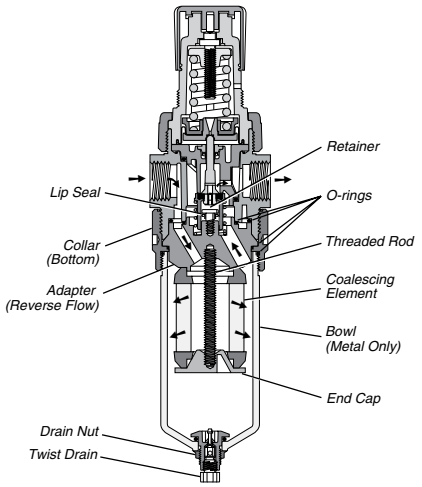

Figure 2: Standard Coalescing

Pneumatic Division
Richland, Michigan 49083
269-629-5000

Installation & Service Instructions: 2FR300D

1" Filter / Regulator Series

ISSUED: August, 2006
Supersedes: October, 2003

Doc.# 2FR300, ECN# 060900, Rev. 9

⚠ WARNING

To avoid unpredictable system behavior that can cause personal injury and property damage:

- **Disconnect electrical supply (when necessary) before installation, servicing, or conversion.**
- **Disconnect air supply and depressurize all air lines connected to this product before installation, servicing, or conversion.**
- **Operate within the manufacturer's specified pressure, temperature, and other conditions listed in these instructions.**
- **Medium must be moisture-free if ambient temperature is below freezing.**
- **Service according to procedures listed in these instructions.**
- **Installation, service, and conversion of these products must be performed by knowledgeable personnel who understand how pneumatic products are to be applied.**
- **After installation, servicing, or conversion, air and electrical supplies (when necessary) should be connected and the product tested for proper function and leakage. If audible leakage is present, or the product does not operate properly, do not put into use.**
- **Warnings and specifications on the product should not be covered by paint, etc. If masking is not possible, contact your local representative for replacement labels.**

⚠ WARNING

Product rupture can cause serious injury.
Do not connect regulator to bottled gas.
Do not exceed maximum primary pressure rating.

Safety Guide

For more complete information on recommended application guidelines, see the Safety Guide section of Pneumatic Division catalogs or you can download the **Pneumatic Division Safety Guide** at: www.parker.com/safety

Introduction

Follow these instructions when installing, operating, or servicing the product.

Application Limits

These products are intended for use in general purpose compressed air systems only.

	kPa	PSIG	bar
Operating Pressure Maximum	1700	250	17.0

Operating Temperature Maximum	80°C (175°F)
Operating Temperature Minimum	0°C (32°F)

Note: The maximum recommended pressure drop for a particulate filter is 70 kPa (10 PSIG, 0.7 bar).

Symbols

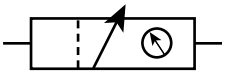

Filter / Regulator

Installation

1. The filter/regulator should be installed with reasonable accessibility for service whenever possible – repair service kits are available. Keep pipe or tubing lengths to a minimum with inside clean and free of dirt and chips. Pipe joint compound should be used sparingly and applied only to the male pipe – never into the female port. Do not use PTFE tape to seal pipe joints – pieces have a tendency to break off and lodge inside the unit, possibly causing malfunction. Also, new pipe or hose should be installed between the filter/regulator and equipment being protected.
2. The upstream pipe work must be clear of accumulated dirt and liquids.
3. Select a filter/regulator location as close as possible to the equipment being protected.
4. Install filter/regulator so that air flows in the direction of arrow on body.
5. Install filter/regulator vertically with the bowl drain mechanism at the bottom. Free moisture will thus drain into the sump ("quiet zone") at the bottom of the bowl.
6. Gauge ports are located on both sides of the filter/regulator body for your convenience. It is necessary to install a gauge or socket pipe plugs into each port during installation.

Operation

1. Both free moisture and solids are removed automatically by the filter.
2. Manual drain filters must be drained regularly before the separated moisture and oil reaches the bottom of the baffle or end cap.
3. The filter element should be removed and replaced when pressure differential across the filter is 69 kPa (10 PSIG).
4. Before turning on the air supply, turn the knob counterclockwise until compression is released from the pressure control spring. Then turn knob clockwise and adjust regulator to desired downstream pressure. This permits pressure to build up slowly in the downstream line.
5. To decrease regulated pressure settings, always reset from a pressure lower than the final setting required. Example, lowering the secondary pressure from 550 to 410 kPa (80 to 60 PSIG) is best accomplished by dropping the secondary pressure to 350 kPa (50 PSIG), then adjusting upward to 410 kPa (60 PSIG).
6. When desired secondary pressure settings have been reached, push the knob down to lock this pressure setting.

⚠ WARNING

FAILURE OR IMPROPER SELECTION OR IMPROPER USE OF THE PRODUCTS AND/OR SYSTEMS DESCRIBED HEREIN OR RELATED ITEMS CAN CAUSE DEATH, PERSONAL INJURY AND PROPERTY DAMAGE.

This document and other information from Parker Hannifin Corporation, its subsidiaries and authorized distributors provide product and/or system options for further investigation by users having technical expertise. It is important that you analyze all aspects of your application, including consequences of any failure and review the information concerning the product or systems in the current product catalog. Due to the variety of operating conditions and applications for these products or systems, the user, through its own analysis and testing, is solely responsible for making the final selection of the products and systems and assuring that all performance, safety and warning requirements of the application are met.

The products described herein, including without limitation, product features, specifications, designs, availability and pricing, are subject to change by Parker Hannifin Corporation and its subsidiaries at any time without notice.

EXTRA COPIES OF THESE INSTRUCTIONS ARE AVAILABLE FOR INCLUSION IN EQUIPMENT / MAINTENANCE MANUALS THAT UTILIZE THESE PRODUCTS. CONTACT YOUR LOCAL REPRESENTATIVE.

Service

⚠ **Caution: Disconnect or shut off air supply and exhaust the primary and secondary pressures before servicing unit. Turning the adjusting knob counterclockwise does not vent downstream pressure on non-relieving regulators. Downstream pressure must be vented before servicing regulator.**

Note: Grease packets are supplied with kits for lubrication of seals. Use only mineral based grease or oils. Do not use synthetic oils such as esters. Do not use silicones.

Note: After servicing unit, turn on air supply and adjust regulator to the desired downstream pressure. Check unit for leaks. If leakage occurs, do not operate - conduct repairs and retest.

Service Kits Available

Description	Kit Number	Contains Items
Element Kits:		(5) Bowl Seal and (2) Element
5 Micron	P3NKA00ESE	
40 Micron	P3NKA00ESG	
25 Micron Porous Bronze	P3NKA00ESJ	
Relieving Regulator Repair Kit	P3NKA00RR	(1) Piston, (3) O-ring, (4) Poppet Assembly, (6) Poppet Return Spring, (7) Lipseal, (8) O-ring
Non-relieving Regulator Repair Kit	P3NKA00RN	
Auto Drain Kit	PS506	(9) Auto Drain Assembly

Servicing Filter Element

Refer to picture for disassembling, servicing, and re-assembling unit.

Servicing Regulator

1. Disengage the adjusting knob by pulling upward. Turn adjusting knob counterclockwise until the compression is released from the pressure control spring.
2. Disassemble and service as required. Refer to picture for details.
3. Re-assemble unit. Refer to picture for details.

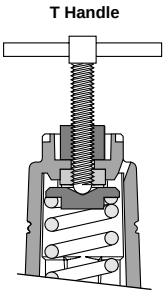

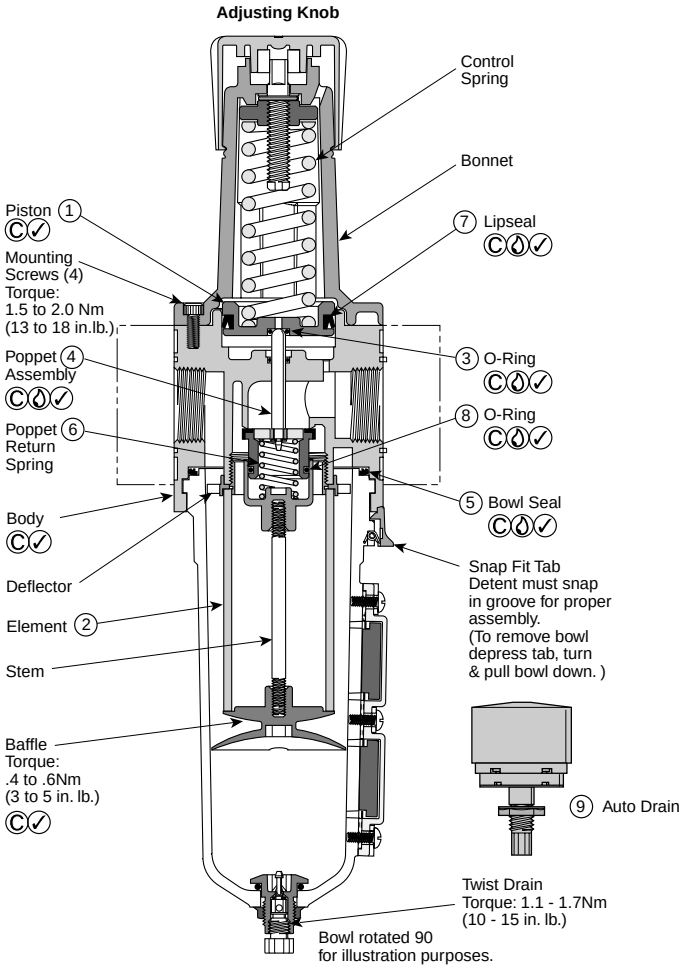

Lightly grease with provided lubricant.

Inspect for nicks, scratches, and surface imperfections. If present, reduced service life is probable and future replacement should be planned.

Clean with lint-free cloth.

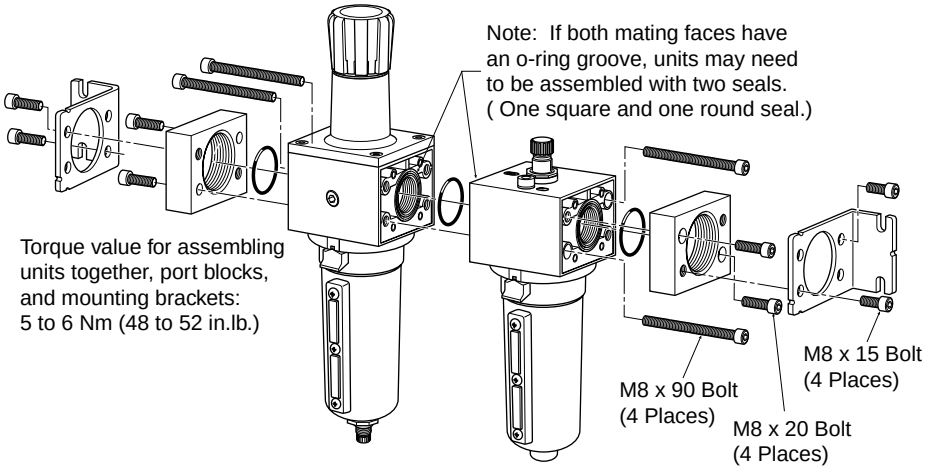

Pneumatic Division
Richland, Michigan 49083
269-629-5000

Installation and Service Instructions 2R201

PS737: Tamperproof Conversion Instructions for 06 and 07 Series Regulators

ISSUED: November, 2003
Supersedes: April, 2003

Doc.# 2R201, ECN# 030539, Rev. 3

⚠ WARNING

To avoid unpredictable system behavior that can cause personal injury and property damage:

- **Disconnect electrical supply (when necessary) before installation, servicing, or conversion.**
- **Disconnect air supply and depressurize all air lines connected to this product before installation, servicing, or conversion.**
- **Operate within the manufacturer's specified pressure, temperature, and other conditions listed in these instructions.**
- **Medium must be moisture-free if ambient temperature is below freezing.**
- **Service according to procedures listed in these instructions.**
- **Installation, service, and conversion of these products must be performed by knowledgeable personnel who understand how pneumatic products are to be applied.**
- **After installation, servicing, or conversion, air and electrical supplies (when necessary) should be connected and the product tested for proper function and leakage. If audible leakage is present, or the product does not operate properly, do not put into use.**
- **Warnings and specifications on the product should not be covered by paint, etc. If masking is not possible, contact your local representative for replacement labels.**

Introduction

Follow these instructions when installing, operating, or servicing the product.

Conversion Kit PS737

Conversion of 06 and 07 Series Regulators from standard knob type adjustment to Tamperproof Type Regulator.

Kit Consist Of:

1- Bonnet Assembly (Hex Nut Installed)
1- Hex Socket Set Screw
1- Hex Sleeve Insert
1- Key Lock Housing
1- Removable Key
1- Spring Rest
1- Grease Tube
Conversion Instructions

A. Shut off air supply and depressurize the unit.
B. Disengage adjusting knob by pulling upward. Turn adjusting knob counterclockwise until compression is released from the pressure control spring. Turning the knob counterclockwise does not vent downstream pressure on non-relieving regulators. Downstream pressure must be vented before servicing or conversion of the regulator.
C. Unscrew the threaded collar and remove the bonnet assembly.
D. Disassemble the diaphragm assembly and control spring.
E. Apply grease to the male thread of the hex socket set screw and in the pocket of the spring rest.
F. Install spring rest, control spring and diaphragm assembly into bonnet assembly.
G. Assemble bonnet assembly to body and tighten threaded collar hand tight plus 1/4 turn.
H. Install hex socket set screw into bonnet assembly. Adjust set screw to the desired downstream pressure setting.
I. Assemble hex sleeve insert over set screw by turning hex sleeve insert clockwise until hex sleeve insert bottoms on bonnet. Tighten hex sleeve insert to .8 to 1.0 Nm (7 to 9 ft. lbs.) torque. It may be necessary to use a 3/16 hex wrench to prevent the set screw from turning while tightening the hex sleeve insert.

⚠ **CAUTION: It is important to tighten the hex sleeve insert to .8 to 1.0 Nm (7 - 9 ft. lbs.) torque. Failure to tighten the hex sleeve insert properly will cause the pressure setting to be unstable during pulsating or vibration service. An improperly torqued hex sleeve insert may rotate during pulsed or vibration service causing the pressure to change resulting in injury.**

J. Slip key lock housing over insert. Do not turn key.
K. Remove key. Downstream pressure is now set and tamperproof.

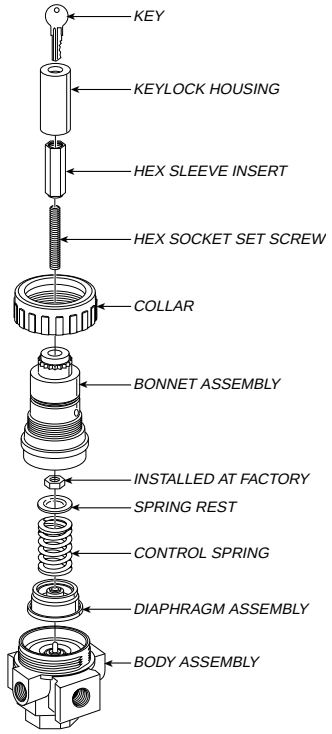

⚠ WARNING

Product rupture can cause serious injury.

Do not connect regulator to bottled gas.

Do not exceed maximum primary pressure rating.

⚠ WARNING

FAILURE OR IMPROPER SELECTION OR IMPROPER USE OF THE PRODUCTS AND/OR SYSTEMS DESCRIBED HEREIN OR RELATED ITEMS CAN CAUSE DEATH, PERSONAL INJURY AND PROPERTY DAMAGE.

This document and other information from The Company, its subsidiaries and authorized distributors provide product and/or system options for further investigation by users having technical expertise. It is important that you analyze all aspects of your application, including consequences of any failure and review the information concerning the product or systems in the current product catalog. Due to the variety of operating conditions and applications for these products or systems, the user, through its own analysis and testing, is solely responsible for making the final selection of the products and systems and assuring that all performance, safety and warning requirements of the application are met.

The products described herein, including without limitation, product features, specifications, designs, availability and pricing, are subject to change by The Company and its subsidiaries at any time without notice.

EXTRA COPIES OF THESE INSTRUCTIONS ARE AVAILABLE FOR INCLUSION IN EQUIPMENT / MAINTENANCE MANUALS THAT UTILIZE THESE PRODUCTS. CONTACT YOUR LOCAL REPRESENTATIVE.

P31 Mini + P32 Compact

(UK) Common Ported Regulators
(CN) 汇流型减压阀
(FR) Régulateurs à orifices communs
(DE) Regler mit allgemeinen Anschlüssen
(IT) Regolatori con porte comuni
(JP) マニホールドレギュレータ
(KR) 공통급기 레귤레이터
(ES) Reguladores de boca común
(SE) Sammanbyggda regulatorer

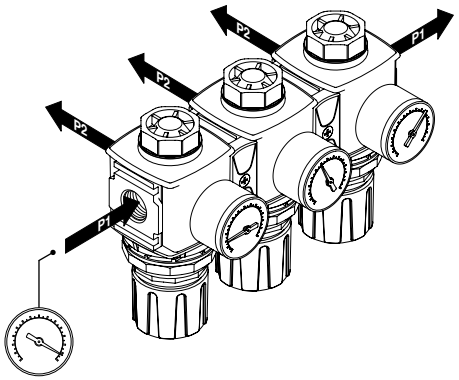

(UK) Safety Lockout Valves
(CN) 可锁定安全阀
(FR) Distributeurs verrouillables
(DE) Sicherheitsabschaltventile
(IT) Valvole di bloccaggio di sicurezza
(JP) ロックアウトバルブ
(KR) 안전 잔압 배기밸브
(ES) Válvulas de bloqueo - seguridad
(SE) Säkerhetsavstängningsventiler

(UK) Ball Valve
(CN) 球阀
(FR) Vanne à boisseau
(DE) Kugelventil
(IT) Valvola a sfera
(JP) ボールバルブ式
(KR) 볼밸브
(ES) Válvula de bola
(SE) Kulventil

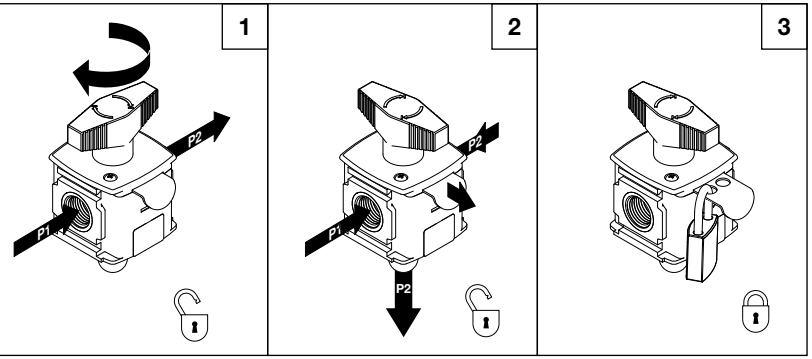

(UK) Slide Valve
(CN) 截止阀
(FR) Tiroir
(DE) Schieberventil
(IT) Valvola scorrevole
(JP) スライドバルブ式
(KR) 슬라이드밸브
(ES) Válvula de corredera
(SE) Slidventil

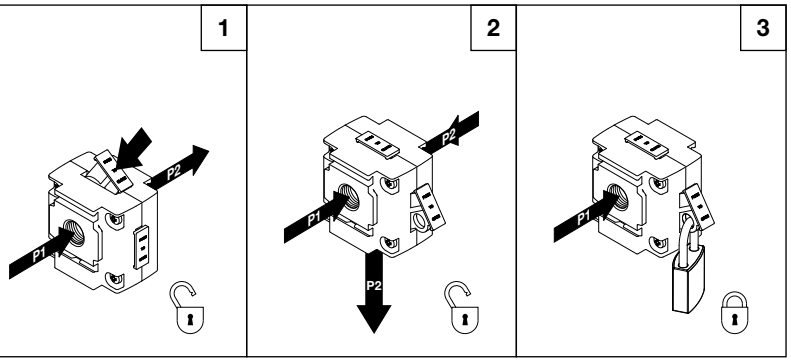

5FRL100 Rev. E

Global Air Preparation System

EN130810

(EN) ⚠ WARNING

To avoid unpredictable system behaviour that can cause personal injury and proper damage:

- Disconnect electrical supply (when necessary) before, installation, servicing, or conversion.
- Disconnect air supply and depressurize all air lines connected to this product before installation, servicing or conversion.
- Operate within the manufacturer's specified pressure, temperature, and other conditions listed in these instructions.
- Medium must be moisture-free if ambient temperature is below freezing.
- Service according to procedures listed in these instructions.
- Installation, service and conversion of these products must be performed by knowledgeable personnel who understand how pneumatic products are to be applied.
- After installation, servicing or conversion, air and electrical supplies (when necessary) should be connected and the product tested for proper function and leakage. If audible leakage is present or the product does not operate properly, do not put into use.
- Warning and specifications on the product should not be covered by paint, etc. If masking is not possible, contact your local representative for replacement labels.

(EN) ⚠ WARNING

FAILURE OR IMPROPER SELECTION OR IMPROPER USE OF THE PRODUCTS AND/OR SYSTEMS DESCRIBED HEREIN OR RELATED ITEMS CAN CAUSE DEATH, PERSONAL INJURY AND PROPERTY DAMAGE.

This document and other information from the Company, it's subsidiaries and authorised distributors provide product and/or system options for further investigation by users having technical expertise. It is important that you analyze all aspects of your application, including consequences of any failure and review the information concerning the product or systems in the current product catalogue. Due to the variety of operating conditions and applications for these products or systems, the user, through its own analysis and testing, is solely responsible for making the final selection of the products and systems and assuring that all performance, safety and warning requirements of the application are met.

The products described herein, including without limitation, product features, specifications, designs, availability and pricing, are subject to change by The Company and its subsidiaries at any time without notice.

(EN) ⚠ CAUTION

Polycarbonate bowls, being transparent and tough, are ideal for use with Filters and Lubricators. They are suitable for use in normal industrial environments, but should not be located in areas where they could be subjected to direct sunlight, an impact blow, nor temperatures outside of the rated range. As with most plastics, some chemicals can cause damage. Polycarbonate bowls should not be exposed to chlorinated hydrocarbons, ketones, esters and certain alcohols. They should not be used in air systems where compressors are lubricated with fire-resistant fluids such as phosphate ester and diester types.

Metal bowls are recommended where ambient and/or media conditions are not compatible with polycarbonate bowls. Metal bowls resist the action of most such solvents, but should not be used where strong acids or bases are present or in salt laden atmospheres. Consult the factory for specific recommendations where these conditions exist.

TO CLEAN POLYCARBONATE BOWLS USE MILD SOAP AND WATER ONLY! DO NOT use cleansing agents such as acetone, benzene, carbon tetrachloride, gasoline, toluene, etc., which are damaging to this plastic.

(EN) Safety Guide

For more complete information on recommended application guidelines, see the Safety Guide section of Pneumatic Division catalogues or you can download the Pneumatic Division Safety Guide at: *www.parker.com/safety*

(EN) ⚠ WARNING

To avoid polycarbonate bowl rupture that can cause personal injury or property damage, do not exceed bowl pressure or temperature ratings. Polycarbonate bowls have a 150 PSIG (10 bar) pressure rating and a maximum temperature rating of 125°F (52°C).

EXTRA COPIES OF THESE INSTRUCTIONS ARE AVAILABLE FOR INCLUSION IN EQUIPMENT / MAINTENANCE MANUALS THAT UTILIZE THESE PRODUCTS. CONTACT YOUR LOCAL REPRESENTATIVE.

(CN) ⚠ 警告

为避免不可预测的系统运作而导致人身伤害和资产损害：

- 安装，维修和改动前必须断开电源供应；
- 安装，维修和改动前必须断开电源供应，释放连接该产品的管路压力；
- 必须在厂商所指定的压力，温度和其他使用说明书中注明的环境条件 下操作使用；
- 在环境温度低于零下时介质必须是无油的；
- 根据使用说明书中厂商推荐的程序保养；
- 必须由气动专业人士来安装，维护和改动产品；
- 安装，维修，改动后，气源和电气需要连接，并测试产品功能及是否 有泄露。如果有可听到的泄漏声或操作不确，不可投入使用；
- 产品上的警示和规范不能被油漆等覆盖。如果标签不清晰，请联系相 关人员更换标签。

(CN) ⚠ 警告

错误或者不正确地选择和使用 错误或者不正确地选择和产品信息有可能会导致死亡，人身伤害和财产损失。

这个文件和另外的信息来自公司总部，它是给分销商补充和授权产品或者系统 的选项，是给用户调查研究用的技术资料。分析你的所有应用，包括任何一旦 发生错误的后果并在现有的产品目录中阅读相关产品或系统信息，对于您来说 都是非常有必要的。由于操作环境和产品或系统的使用是多样性的，用户通过 自己的分析和测试，对最终产品和系统选择负有绝对责任，并需要确保所有产 品的性能，安全和应用时需要注意的问题都已满足。

这里提到的产品，包括无限制性，产品特性，说明书，设计，实用性和 价格可由公司总部及其下属公司在没有通知的情况下改变。

(CN) ⚠ 注意

碳酸聚酯水杯是透明坚固的，是过滤器和油雾器的理想选择。适合一般工业环 境应用，但是不适用于那些阳光直射，冲击和户外温差大的场合。因为含有大 量塑料，某些化学物质会损坏水杯。碳酸聚酯水杯不能暴露于碳氢化合物， 酮，酯和某些酒精。此类水杯不能应用于被防火型液体，如，碳酸盐酯和二酯 类润滑过的空压机的气动系统中。

在那些不适合碳酸聚酯水杯的环境中，推荐使用金属水杯。金属水杯能抵抗大 多数溶解剂，但是不能用在强酸，含盐的场所。对于特殊场合请咨询工厂。

碳，汽油，甲苯等清洁剂，这会直接损害塑料。

(CN) 安全指南

更多完整的推荐应用指导信息，请见气动样本中的安全指南部分或者可以在 气动部门安全指南网站下载资料： *www.parker.com/safety*

(CN) ⚠ 警告

为了避免碳酸聚酯水杯破裂而导致的人身和财产损害，不能使用超过水杯的 压力和温度范围。碳酸聚酯水杯最高承受 150 PSIG (10bar)压力和最高125°F (52°C)的温度

如需多份涉及这些产品维修/操作指南的使用说明书。请联系当 地办事处。

(FR) ⚠ MISE EN GARDE

Afin de prévenir tout comportement imprévisible du système pouvant entrainer des accidents et des dommages matériels :

- **Débrancher l'alimentation électrique (s'il y a lieu) avant de procéder à l'installation, à l'entretien ou à la transformation.**
- **Débrancher l'approvisionnement en air et mettre hors pression toutes les conduites d'air de ce produit avant de procéder à l'installation, à l'entretien ou à la transformation.**
- **Faire fonctionner dans les conditions de pression, de température et autres qui sont indiquées dans ces instructions.**
- **Si la température ambiante est inférieure au point de congélation, le fluide doit être exempt d'humidité.**
- **Effectuer l'entretien conformément aux procédures qui sont indiquées dans ces instructions.**
- **L'installation, l'entretien et la transformation de ces produits doivent être effectués par des personnes familiarisées avec les produits pneumatiques.**
- **Après l'installation, l'entretien ou la transformation, rétablir l'alimentation électrique ainsi que l'approvisionnement en air (s'il y a lieu) et tester le produit afin de s'assurer qu'il fonctionne bien et qu'il n'y a pas de fuites. Si une fuite s'entend ou si le produit ne fonctionne pas correctement, ne pas le mettre en service.**
- **Les mises en garde et les indications portées sur le produit ne doivent pas être recouvertes par de la peinture, etc. Si le masquage n'est pas possible, contacter le représentant local pour obtenir des étiquettes de remplacement.**
- **Les mises en garde et les indications portées sur le produit ne doivent pas être recouvertes par de la peinture, etc. Si le masquage n'est pas possible, contacter le représentant local pour obtenir des étiquettes de remplacement.**

(FR) ⚠ MISE EN GARDE

LA NON OBSERVATION D'INSTRUCTIONS OU LA SÉLECTION IMPROPRE OU L'USAGE INAPPROPRIÉ DES PRODUITS ET/OU DES SYSTÈMES DÉCRITS AUX PRÉSENTES, OU ARTICLES CONNEXES, PEUVENT ENTRAÎNER LA MORT, DES PRÉJUDICES CORPORELS ET/OU DES DOMMAGES MATÉRIELS.

Le présent document et toute autre information provenant de la Société, de ses filiales et distributeurs agréés se réfèrent à des produits et/ou des systèmes pouvant faire l'objet de tests et de contrôles de la part d'utilisateurs compétents, possédant une expertise technique. Il est important que vous analysiez tous les aspects de votre application, notamment les conséquences d'une défaillance, et étudiiez les informations concernant le produit ou les systèmes qui figurent dans le catalogue actuel. Compte tenu de la variété des conditions d'exploitation et des applications inhérentes à ces produits et/ou systèmes, l'utilisateur est, par le biais de ses propres analyses et tests, seul responsable de la sélection finale desdits produits et/ou systèmes et s'engage à ce que son application réponde à tous les critères relatifs aux performances, à la sécurité et aux mises en garde.

Les produits décrits aux présentes, y compris et sans limitation, les caractéristiques produit, les spécifications, les conceptions, la disponibilité et les prix, peuvent faire l'objet de modifications par la Société et ses filiales, à tout moment et sans préavis.

(FR) ⚠ ATTENTION

Durs et transparents, les bols en polycarbonates sont parfaitement indiqués pour l'utilisation dans les filtres et les lubrificateurs. Ils sont compatibles avec les milieux industriels normaux mais ne doivent pas être placés dans des lieux où ils pourraient être exposés à la lumière directe du soleil, à des chocs ou à des températures situées en-dehors de leur plage d'utilisation nominale. Comme la plupart des plastiques, cette matière peut être endommagée par certains produits chimiques. Les bols en polycarbonate ne doivent pas être exposés aux hydrocarbures chlorés, aux cétones, aux éthers et à certains alcools. Ils ne doivent pas être utilisés dans des systèmes pneumatiques dont les compresseurs sont lubrifiés par des fluides résistant au feu tels que les esters et diesters de phosphate.

Les bols métalliques sont recommandés lorsque le milieu et/ou le fluide sont incompatibles avec les bols en polycarbonates. Les bols métalliques sont résistants à la plupart de ces solvants mais ne doivent pas être utilisés en milieu fortement acide ou basique, ou en atmosphère salée. Si de telles conditions prévalent, adressez-vous au fabricant afin d'obtenir des recommandations spécifiques.

NETTOYER LES BOLS EN POLYCARBONATE UNIQUEMENT À L'EAU ET AU SAVON DOUX ! NE PAS utiliser d'agents nettoyants tels que l'acétone, le benzène, le tétrachlorure de carbone, l'essence, le toluène, etc., qui endommageraient ce plastique.

(FR) Guide de sécurité

Pour obtenir de plus amples informations sur les directives à appliquer recommandées, prière de vous reporter à la section Guide de sécurité des catalogues de la Pneumatic Division ou de télécharger le Guide de sécurité de la Pneumatic Division sur le site : www.parker.com/safety

(FR) ⚠ MISE EN GARDE

Pour éviter que le bol de polycarbonate se rompe et provoque des préjudices corporels ou des dommages matériels, ne pas dépasser les limites maximales de pression et de température, à savoir 150 PSIG (10 bar) et 125 °F (52°C).

DES EXEMPLAIRES DE CES INSTRUCTIONS SONT DISPONIBLES POUR INSERTION DANS LE MATÉRIEL OU LES MANUELS D'ENTRETIEN QUI UTILISENT CES PRODUITS. VEUILLEZ CONTACTER VOTRE REPRÉSENTANT LOCAL.

(DE) ⚠ WARNUNG

Als Schutz vor unvorhersehbarem Systemverhalten, das zu Verletzungen und Sachschäden führen kann, sind folgende Maßnahmen zu ergreifen:

- **Vor Einbau, Servicearbeiten oder Umbau gegebenenfalls die Stromversorgung unterbrechen.**
- **Vor Einbau, Servicearbeiten oder Umbau die Druckluftversorgung unterbrechen und alle an das Produkt angeschlossenen Luftleitungen vom Druck befreien.**
- **Im Betrieb sind die vom Hersteller angegebenen Druck- und Temperaturbereiche und die übrigen in der Betriebsanleitung aufgeführten Betriebsbedingungen einzuhalten.**
- **Das Betriebsmedium muss bei Umgebungstemperaturen unter dem Gefrierpunkt absolut trocken sein.**
- **Servicearbeiten sind gemäß den in diesem Handbuch aufgeführten Vorgehensweisen durchzuführen.**
- **Einbau, Servicearbeiten und Umbau dieser Produkte dürfen nur von geschulten Mitarbeitern vorgenommen werden, die über gute Kenntnisse beim Einsatz von Pneumatikprodukten verfügen.**
- **Nach Einbau, Servicearbeiten oder Umbau ist die Strom- und Druckluftversorgung bei Bedarf wieder anzuschließen und das Produkt einer sorgfältigen Dichtigkeits- und Funktionsprüfung zu unterziehen. Wenn eine hörbare Undichtigkeit vorliegt oder das Produkt nicht einwandfrei funktioniert, darf es nicht in Betrieb genommen werden.**
- **Warntexte und technische Angaben auf dem Produkt dürfen nicht durch Farbe oder dgl. verdeckt sein. Wenn sich die Schilder nicht abdecken lassen, hält der Händler vor Ort neue Schilder bereit.**

(DE) ⚠ WARNUNG

DURCH DAS VERSAGEN ODER DIE UNSACHGEMÄSSE AUSWAHL ODER VERWENDUNG DER HIER BESCHRIEBENEN PRODUKTE UND/ODER SYSTEME ODER DAMIT IN VERBINDUNG STEHENDER GERÄTE KANN ES ZU TODESFÄLLEN, VERLETZUNGEN UND SACHBESCHÄDIGUNGEN KOMMEN.

Dieses Dokument und andere Information der Parker Hannifin Corporation, ihrer Niederlassungen und autorisierten Händler stellt Produkt- und/oder Systemoptionen zur Verfügung, die durch einen Anwender mit entsprechenden technischen Kenntnissen vor dem Einsatz auf Eignung überprüft werden müssen. Es ist wichtig, dass alle Aspekte der Anwendung analysiert und die produkt- oder systemrelevanten Angaben dieses Produktkatalogs überprüft werden. Aufgrund der Vielfältigkeit von Betriebsbedingungen und Einsatzbereichen dieser Produkte oder Systeme ist der Anwender, in Form von eigenen Analysen und Tests, allein verantwortlich für die endgültige Auswahl des Produkts bzw. Systems. Er muss sicherstellen, dass alle Leistungsmerkmale, Sicherheits- und Warnhinweise für den jeweiligen Einsatzbereich erfüllt sind.

Die hier beschriebenen Produkte, einschließlich aller Angaben zu Produktmerkmalen, Spezifikationen, Konstruktionen, Verfügbarkeit und Preisgestaltung, können jederzeit, ohne Ankündigung und uneingeschränkt von der Parker Hannifin Corp. und ihren Niederlassungen geändert werden.

(DE) ⚠ BITTE BEACHTEN

Transparente und robuste Behälter aus Polycarbonat eignen sich bestens für Filter und Schmiergeräte. Sie sind für den Einsatz unter normalen Industriebedingungen vorgesehen, sollten jedoch nicht direkter Sonneneinstrahlung oder Stößen ausgesetzt und nur innerhalb
des angegebenen Temperaturbereichs benutzt werden. Wie alle Kunststoffe können sie durch gewisse Chemikalien beschädigt werden. Behälter aus Polycarbonat sollten weder Chlorkohlenwasserstoffen noch Ketonen, Estern oder gewissen Alkoholen ausgesetzt werden. Sie sollten auch nicht in Druckluftsystemen eingesetzt werden, deren Kompressoren mit feuerfesten Flüssigkeiten wie z.B. Phosphatester oder Di-Ester geschmiert werden.

Metallbehälter werden empfohlen, wenn Polycarbonatbehälter aufgrund der Umgebungsbedingungen und der verwendeten Medien
nicht verwendet werden dürfen. Metallbehälter widerstehen den meisten dieser Lösungsmittel, sollten jedoch keinen starken Säuren oder Basen ausgesetzt oder in salzhaltigen Umgebungen eingesetzt werden. Setzen Sie sich bei Einsätzen unter diesen Umgebungsbedingungen bitte mit dem Hersteller in Verbindung.

ZUR REINIGUNG VON POLYCARBONAT-BEHÄLTERN DÜRFEN AUSSCHLIESSLICH MILDE SEIFENLÖSUNGEN UND WASSER VERWENDET WERDEN! KEINE Reinigungsmittel wie Azeton,

(DE) Sicherheitshinweise

Ausführlichere Informationen über Richtlinien in Bezug auf die empfohlenen Einsatzbereiche siehe Sicherheitshinweise der Kataloge der Pneumatic Division, die hier auch heruntergeladen

(DE) ⚠ WARNUNG

Damit der Polycarbonatbehälter nicht platzt und Verletzungen
oder Sachbeschädigungen verursacht, sind die Richtwerte für Behälterdruck und Temperatureinstellung nicht zu überschreiten. Polycarbonatbehälter sind für einen Nenndruck von 10 bar und eine Höchsttemperatur von

DES EXEMPLAIRES DE CES INSTRUCTIONS SONT DISPONIBLES POUR INSERTION DANS LE MATÉRIEL OU LES MANUELS D'ENTRETIEN QUI UTILISENT CES PRODUITS. VEUILLEZ CONTACTER VOTRE REPRÉSENTANT LOCAL.

(IT) ⚠ ATTENZIONE

Per evitare comportamenti imprevedibili del sistema che possono provocare lesioni personali e danni alle cose:

- **Scollegare l'alimentazione elettrica (se necessario) prima di installazione, manutenzione o conversione.**
- **Scollegare l'alimentazione dell'aria e depressurizzare tutte le condutture collegate al prodotto prima di installazione, manutenzione o conversione.**
- **Utilizzare il prodotto alla pressione, alla temperatura e alle altre condizioni specificate in queste istruzioni.**
- **Il mezzo deve essere privo di condensa se la temperatura ambiente è inferiore al punto di congelamento.**
- **Effettuare la manutenzione secondo le procedure specificate in queste istruzioni.**
- **Installazione, manutenzione e conversione di questi prodotti devono essere effettuate da personale competente relativamente al funzionamento dei prodotti pneumatici.**
- **Dopo installazione, manutenzione o conversione, ricollegare le alimentazioni dell'aria ed elettrica (se necessario) e verificare che il prodotto funzioni correttamente e non vi siano perdite. In caso di perdita o funzionamento anomalo del prodotto, non utilizzarlo.**
- **Le avvertenze e le specifiche sul prodotto non devono essere coperte da vernice ecc. Qualora siano illeggibili, contattare il proprio rappresentante locale per le targhette di ricambio.**

(IT) ⚠ ATTENZIONE

LA SCELTA OPPURE L'UTILIZZO ERRATO DEI PRODOTTI E/O SISTEMI IVI DESCRITTI OPPURE DEGLI ARTICOLI CORRELATI PUÒ PROVOCARE GRAVI LESIONI PERSONALI, MORTE E DANNI ALLE COSE.

Il presente documento ed altre informazioni fornite dall'azienda, relative affiliate e distributori autorizzati propongono opzioni di prodotti e/o sistemi il cui utilizzo deve essere valutato da utenti in possesso delle competenze tecniche necessarie. E' importante analizzare ogni aspetto della propria applicazione, comprese le conseguenze in caso di guasto, nonché valutare le informazioni relative al prodotto o sistema contenute nel presente catalogo di prodotti. In seguito alla varietà di condizioni di esercizio ed applicazioni per questi prodotti o sistemi, l'utente, con le proprie valutazioni ed i propri test, è l'unico responsabile della scelta finale di prodotti e sistemi nonché di accertarsi che tutti i requisiti di prestazioni, sicurezza e normativi dell'applicazione siano soddisfatti.

I prodotti ivi descritti, inclusi ma non limitati a, caratteristiche dei prodotti, specifiche, design, disponibilità e prezzo, sono soggetti a mod-

(IT) ⚠ ATTENZIONE

Le vaschette in policarbonato, trasparenti e robuste, sono ideali per l'uso con filtri e lubrificatori. Sono indicate per l'uso in normali ambienti industriali, ma non devono essere collocate in aree esposte a luce solare diretta, urti o temperature al di fuori del range indicato. Come molte plastiche, alcune sostanze chimiche possono provocare danni. Le vaschette in policarbonato non devono essere esposte a idrocarburi, chetoni, esteri e determinati alcool. Non devono essere utilizzate in impianti pneumatici con compressori lubrificati con fluidi ignifughi come esteri e diesteri di fosfati.

Qualora le condizioni ambientali e/o il mezzo non siano compatibili con le vaschette in policarbonato, si raccomanda l'uso di vaschette metalliche. Le vaschette metalliche resistono alla maggior parte di questi solventi, ma non devono essere utilizzate in presenza di acidi o basi forti oppure in ambienti estremamente salini. Consultare la fabbrica per le eventuali raccomandazioni specifiche.

PER LA PULIZIA DELLE VASCHETTE IN POLICARBONATO, UTILIZZARE

(IT) Guida alla sicurezza

Per informazioni più complete sulle linee guida di applicazione raccomandate, consultare la sezione Guida alla sicurezza dei cataloghi Pneumatic Division o scaricare la guida all'indirizzo:

(IT) ⚠ ATTENZIONE

Per evitare la rottura delle vaschette in policarbonato e conseguenti lesioni personali o danni alle cose, non superare la pressione o la temperatura nominale della vaschetta. Le vaschette in policarbonato hanno una pressione nominale di 150 PSIG (10 bar) e una temperatura massima di 125°F (52°C).

ULTERIORI COPIE DI QUESTE ISTRUZIONI SONO DISPONIBILI A INTEGRAZIONE DEI MANUALI DI USO / MANUTENZIONE PER GLI UTENTI DI QUESTI PRODOTTI. CONTATTARE IL PROPRIO RAPPRESENTANTE LOCALE.

(JP) ⚠ 警告

人が障害を負う危険が生じる、また物理的障害が起こりうる予想外のシステム障害を避けるために:

・機器の取り付け、取り扱いもしくは交換の前に電源を落としてください。

・機器の取り付け、取り扱いもしくは交換前に全ラインの圧縮空気の供給を止め、ライン内の圧縮空気を排出してください。

・圧力、使用温度やコネクション等が説明書に記載されている範囲で機器を使用ください。

・外気が0度以下の場合、完全に乾燥した空気を供給してください。

・説明書の記載通りに機器の操作を行ってください。

・機器の取り付け、取り扱い、交換は空気圧機器の十分な知識と経験を持った人が行ってください。

・機器の取り付け、取り扱い、交換後に電源、圧縮空気を入れ機器が正しく作動するか、空気漏れがないかを確認してください。もし空気漏れが聞こえる場合や機器が適切に作動しない場合、電源、圧縮空気を止めてください。

・商品のラベルに記載された、警告や仕様が塗装などによって消えないようにしてください。もしラベルが必要な場合は、Parkerもしくは当社子会社にラベルを依頼してください。

(JP) ⚠ 警告

本文書に記載した製品、あるいは関連した物品を、正しく選定しなかったり、使い方を誤ったりすれば死亡事故や、怪我、そして物的損害を引き起こす可能性があります。

本文書、並びにParker-Hannifin Corporation、そして当社の子会社ならびに正規販売業者が発行しているその他の情報では、技術的専門知識を有しているお客様が更なる調査を実施できるように、販売している製品やシステムについての情報を提供しています。お客様は各自の解析や試験の結果に基づきシステムや部品を最終的に選択し、さらには全ての性能、耐久性、保守、安全性、そして警告要件が満たされているかどうかに関して、唯一お客様自身に責任を負うものとします。お客様は、アプリケーション全てを解析し、該当する業界基準に従い、最新版の製品カタログ内の当該製品の情報、並びにParker、そして当社の子会社や正規販売業者が提供するその他の原材料全てに関する情報に従ってください。

この商品はこの文書で説明されている商品の特徴、仕様、デザイン、入手の可能性、価格はParker、そして当社の子会社や正規販売業者からの通達なく変更される場合があります。

(JP) ⚠ 注意

透明で頑丈なポリカーボネイト製ボウルはフィルタとルブリケータとの使用が理想です。プラスチックボウルは一般的な工業環境に適していますが、直射日光が当たる環境、強風の環境、使用範囲外の温度での使用は避けてください。多くのプラスチックと同じようにいくつかの化学物質はボウルの損傷させます。ポリカーボネイトボウルは塩素化炭化水素、ケトン、エステル、いくつかのアルコール物質の環境では使用できません。ボウルはホスファターゼエステルやジェステルタイプの耐火性潤滑油を使用したコンプレッサからの供給エアを使用ください。

メタルボウルは温度、流体などがポリカーボネイト製ボウルでは使用できない場合に使用を奨励します。メタルボウルは大概の溶剤に耐性がありますが、強酸や塩での使用は避けてください。そのような環境がある場合当社までお問い合わせください。

ポリカーボネイトボウルの洗浄には中性石鹸や水を使用ください。アセトン、ベンジン、炭素四塩化物、ガソリン、トルエン等の洗浄液の使用はしないでください。プラスチック不具合発生の可能性があります。

(JP) 注意事項

より詳細の奨励されるアプリケーションの指針は当社カタログの注意事項をご参照ください。もしくは以下から空気圧機器注意事項がダウンロードできます。
www.parker.com/safety

(JP) ⚠ 警告

人が障害を負う、また物的損害の可能性があるポリカーボネイトボウルの破損を避ける為に、使用圧力範囲、使用温度範囲以上での使用はしないでください。ポリカーボネイトボウルの最高使用圧力は1MPa、最高使用温度は52℃です。

上記以外のメンテナンスマニュアルを含む説明書が必要な場合最寄のParker、そして当社の子会社や正規販売業者に連絡してください。

(UK) Kits (CN) (FR) Kits (DE) Sätze (IT) Kit (JP) (KR) 킷트 (ES) Juegos (SE) Satser

(UK) Filter Element Kits (DE) Filtersätze (KR) 필터 엘리멘트
(CN) 滤芯维修包 (IT) Kit elementi filtranti (ES) Juegos de elementos de filtro
(FR) Kits élément filtrant (JP) ボールバルブ式 (SE) Filterelementsatser

		P31 Mini	P32 Compact	P33 Standard
(UK) 5 micron Particle Filter (CN) 5 微米 颗粒物过滤 (FR) 5 microns Filtre à particules (DE) 5 µ Partikelfilter (IT) 5 micron Filtro antiparticolato	(JP) 5 µm エレメント (KR) 5마이크론 분진 필터 (ES) 5 micras Filtro de partículas (SE) 5 mikron Partikelfilter	P31KA00ESE	P32KA00ESE	P33KA00ESE
(UK) 1 micron Coalescing Filter (CN) 1微米 凝结式过滤 (FR) 1 microns Filtre coalescent (DE) 1 µ Sinterfilter (IT) 1 micron Filtro a coalescenza	(JA) 1 µm エレメント (KR) 1마이크론 콜렉싱 필터 (ES) 1 micras Filtro coalescente (SE) 1 mikron Coalescingfilter	P31KA00ES9	P32KA00ES9	P33KA00ES9
(UK) 0.01 micron Coalescing Filter (CN) 0.01微米 凝结式过滤 (FR) 0.01 microns Filtre coalescent (DE) 0.01 µ Sinterfilter (IT) 0.01 micron Filtro a coalescenza	(JP) 0.01 µm エレメント (KR) 0.01마이크론 콜렉싱 필터 (ES) 0.01 micras Filtro coalescente (SE) 0.01 mikron Coalescingfilter	P31KA00ESC	P32KA00ESC	P33KA00ESC
(UK) Adsorber Filter (CN) 吸附式过滤 (FR) Filtre adsorbant (DE) Adsorberfilter (IT) Filtro ad assorbimento	(JP) 活性炭エレメント (KR) 흡입재 필터 (ES) Filtro absorbente (SE) Adsorptionsfilter	P31KA00ESA	P32KA00ESA	P33KA00ESA

(UK) Regulator + Filter/Regulator Repair Kits
(CN) 调压阀+过滤器/调压阀维修包
(FR) Kits de réparation Régulateur + Filtre/Régulateur
(DE) Reparatursätze Regler + Filter/Regler
(IT) Kit di riparazione regolatore + filtro/regolatore
(JP) レギュレータ+フィルタ/レギュレータリペアキット
(KR) 레귤레이터/필터-레귤레이터 교환부품
(ES) Juegos de reparación de regulador + filtro/regulador
(SE) Regulator + repsats för filter/regulator

	(UK) Relieving (CN) (FR) Décompression (DE) mit Entlüftung (IT) Con scarico (JP) (KR) (ES) Con descarga (SE) Avlastning	(UK) Non-Relieving (CN) (FR) Sans décompression (DE) ohne Entlüftung (IT) Senza scarico (JP) (KR) (ES) Sin descarga (SE) Ingen avlastning
P31 Mini	P31KA00RB	P31KA00RC
P32 Compact	P32KA00RB	P32KA00RC
P33 Standard	P33KA00RB	P33KA00RC

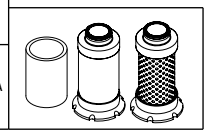

(UK) Bowl/Drain Kits (DE) Behälter-/Entleerungssätze (KR) 보울/드레인 킷트
(CN) 水杯/排水包 (IT) Kit vaschetta/drenaggio (ES) Juegos de recipiente/drenaje
(FR) Kits cuve/purge (JP) ボウル/ドレンキット (SE) Kärl/dräneringsatser

		P31 Mini	P32 Compact	P33 Standard
(UK) Plastic Bowl / Bowl Guard Manual Drain (CN) 塑料水杯 / 水杯保护装置 手动排水 (FR) Cuve en plastique / Enveloppe protectrice de cuve Purge manuelle (DE) Kunststoffbehälter / Schalenschutz Manuelle Entleerung (IT) Vaschetta in plastica / Protezione vaschetta Drenaggio manuale	(JP) プラスチックボウル/ ボウルガード マニュアルドレン (KR) 플라스틱 보울/ 보울가이드 수동 드레인 (ES) Recipiente plástico / Protector de recipiente Drenaje manual (SE) Plastkärl / Kärlskydd Manuell dränering	P31KA00BGM	P32KA00BGM	P33KA00BGM
(UK) Plastic Bowl / Bowl Guard Auto Drain (CN) 塑料水杯 / 水杯保护装置 自动排水 (FR) Cuve en plastique / Enveloppe protectrice de cuve Purge automatique (DE) Kunststoffbehälter / Schalenschutz Automatische Entleerung (IT) Vaschetta in plastica / Protezione vaschetta Drenaggio automatico	(JP) プラスチックボウル/ ボウルガード オートドレン (KR) 플라스틱 보울/ 보울가이드 자동 드레인 (ES) Recipiente plástico / Protector de recipiente Drenaje automático (SE) Plastkärl / Kärlskydd Automatisk dränering	-	P32KA00BGA	P33KA00BGA
(UK) Metal Bowl / Sight Gauge Manual Drain (CN) 金属水杯 / 带观测计 手动排水 (FR) Cuve métallique / Visualisation de niveau Purge manuelle (DE) Metallbehälter / Schauglas Manuelle Entleerung (IT) Vaschetta metallica / Indicatore Drenaggio manuale	(JP) メタルボウル/ レベルゲージ マニュアルドレン (KR) 메탈 보울/ 관측자 수동 드레인 (ES) Recipiente de metal / Mirilla Drenaje manual (SE) Metallkärl / Synglas Manuell dränering	-	P32KA00BSM	P33KA00BSM
(UK) Metal Bowl / Sight Gauge Auto Drain (CN) 金属水杯 / 带观测计 自动排水 (FR) Cuve métallique / Visualisation de niveau Purge automatique (DE) Metallbehälter / Schauglas Automatische Entleerung (IT) Vaschetta metallica / Indicatore Drenaggio automatico	(JP) メタルボウル/ レベルゲージ オートドレン (KR) 메탈 보울/ 관측자 자동 드레인 (ES) Recipiente de metal / Mirilla Drenaje automático (SE) Metallkärl / Synglas Automatisk dränering	-	P32KA00BSA	P33KA00BSA
(UK) Plastic Bowl / Bowl Guard No Drain (CN) 塑料水杯 / 水杯保护装置 不动排水 (FR) Cuve en plastique / Enveloppe protectrice de cuve Sans purge (DE) Kunststoffbehälter / Schalenschutz Kein Abfluss (IT) Vaschetta in plastica / Protezione vaschetta Senza drenaggio	(JP) プラスチックボウル/ ボウルガード/ いいえドレインん (KR) 플라스틱 보울/ 보울가이드 더 드레인 없음 (ES) Recipiente plástico / Protector de recipiente Sin drenaje (SE) Plastkärl / Kärlskydd Ingen dränering	-	P32KA00BGN	P33KA00BGN
(UK) Plastic Bowl / Bowl Guard Pulse Drain (CN) 塑料水杯 / 水杯保护装置 半自动排水 (FR) Cuve en plastique / Enveloppe protectrice de cuve Purge à impulsions (DE) Kunststoffbehälter / Schalenschutz Impulsentleerung (IT) Vaschetta in plastica / Protezione vaschetta Drenaggio ad impulso	(JP) プラスチックボウル/ ボウルガード/ パルストレン (KR) 플라스틱 보울/ 보울가이드 자동 드레인 (ES) Recipiente plástico / Protector de recipiente Drenaje pulsado (SE) Plastkärl / Kärlskydd Pulsdränering	P31KA00BGB	-	-
(UK) Metal Bowl / without Sight Gauge Manual Drain (CN) 塑料水杯 / 不带观测计 手动排水 (FR) Cuve métallique / Sans visualisation de niveau Purge manuelle (DE) Metallbehälter / Ohne Schauglas Manuelle Entleerung (IT) Vaschetta metallica / Senza indicatore Drenaggio manuale	(JP) メタルボウル/ レベルゲージ無し マニュアルドレン (KR) 메탈 보울/ 관측자 없이 수동 드레인 (ES) Recipiente de metal / Sin mirilla Drenaje manual (SE) Metallkärl / Utan synglas Manuell dränering	P31KA00BMM	P32KA00BMM	P33KA00BMM
(UK) Metal Bowl / without Sight Gauge Pulse Drain (CN) 塑料水杯 / 不带观测计 半自动排水 (FR) Cuve métallique / Sans visualisation de niveau Purge à impulsions (DE) Metallbehälter/ Ohne Schauglas Impulsentleerung (IT) Vaschetta metallica / Senza indicatore Drenaggio ad impulso	(JP) メタルボウル/ レベルゲージ無し パルストレン (KR) 메탈 보울/ 관측자 없이 펄스 드레인 (ES) Recipiente de metal /Sin mirilla Drenaje pulsado (SE) Metallkärl/ Utan synglas Pulsdränering	P31KA00SGM	-	-
(UK) Auto Drain (CN) 自动排水 (FR) Purge automatique	(DE) Automatische Entleerung (IT) Drenaggio automatico (JP) オートドレン (KR) 자동 드레인 (ES) Drenaje automático (SE) Automatisk dränering	-	P32KA00DA	P32KA00DA

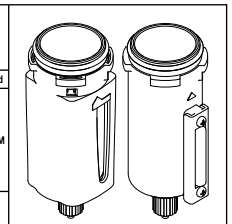

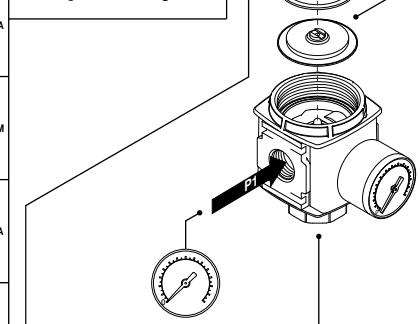

(UK) Torque Values (IT) Coppie di serraggio
(CN) 扭矩值 (JP) 奨励トルク
(FR) Couples (KR) 조임 토르크
(DE) Drehmomentwerte (ES) Valores del par de torsión
(SE) Åtdragningsmoment

	P31 Mini	P32 Compact	P33 Standard
(UK) Bottom Plug (CN) 底部堵头 (FR) Bouchon de fond (DE) Bodenstopfen (IT) Tappo inferiore (JP) 底プラグ (KR) 하부 플러그 (ES) Tapón de fondo (SE) Bottenplugg	1/4 Turn	6.8 Nm 60 in. lbs.	6.8 Nm 60 in. lbs.
(UK) Bonnet (CN) 调节螺母 (FR) Capotage (DE) Ventilhals (IT) Involucro (JP) 蓋 (KR) 보넷 (ES) Caperuza (SE) Bröst	13.6 Nm 120 in. lbs.	54.2 Nm 480 in. lbs.	54.2 Nm 480 in. lbs.

(UK) Filter Element Replacement (JP) フィルタエレメント交換
(CN) 替换滤芯 (KR) 필터 엘리먼트 교환
(DE) Austausch des Filterelements (ES) Recambio del elemento filtrante
(FR) Élément filtrant de remplacement (SE) Utbyteselement
(IT) Elemento filtrante di ricambio

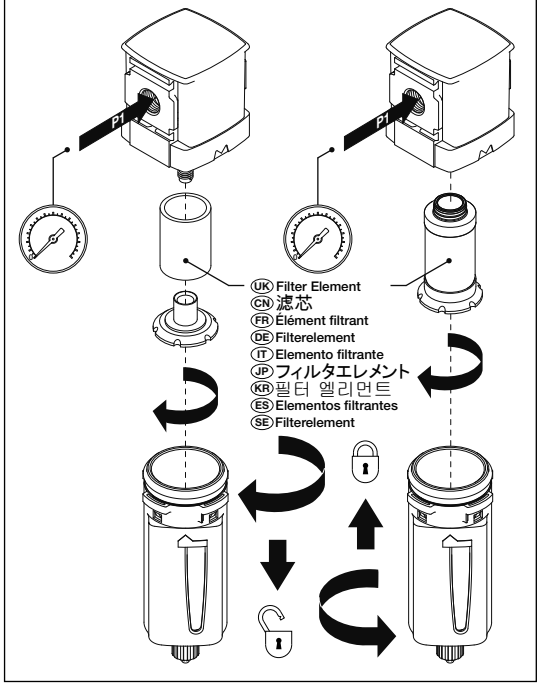

P32 Compact + P33 Standard

(UK) Filter DPI (DE) Filter DPI (KR) 필터 차압표시기
(CN) 过滤器压差显示器 (IT) FPI per filtro (ES) Filtro DPI
(FR) DPI filtre (JP) 目詰まりインジケータ (SE) Dp-indkator

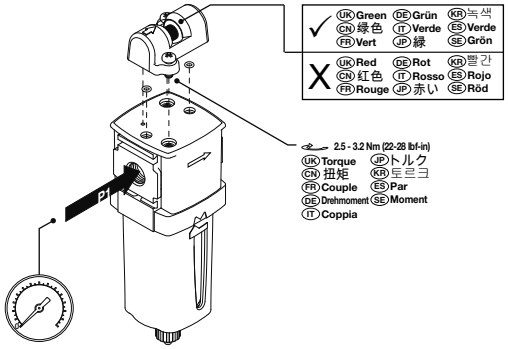

(UK) **DPI must be read under flow condition. Replace element when indicator is red under flow.**

(CN) 压差指示器必须在有流量的情况下读出
指示器盘示红色时替换滤芯

(FR) **L'indicateur de différence de pression (DPI) doit être relevé quand l'air circule. Remplacer l'élément filtrant lorsque l'indicateur est rouge sous le débit.**

(DE) **Der DPI-Wert ist unter Betriebsbedingungen abzulesen. Das Element austauschen, wenn die Anzeige im Betrieb rot ist.**

(IT) **Il DPI deve essere misurato sotto portata. Sostituire l'elemento quando l'indicatore è rosso sotto portata.**

(JP) プラスチックボウル/ ボウルガード/
マニュアルドレン

(KR) DPI(차압표시기)는 에어가 공급되고 있는 상태에서 확인하여 주십시오.
DPI(차압표시기)에 적색이 표시되면 필터 엘리멘트를 교체하여 주십시오.

(ES) **DPI debe ser leído con el caudal activo. Cambiar el elemento cuando el indicador está rojo.**

(SE) **Difftryckindikatorn skall avläsas i drift. Filtret skall bytas när indikatorn visar rött vid drift.**

(UK) DPI Repair Kit (FR) Kit de réparation d'indicateur de différence de pression	(IT) Kit di riparazione DPI (JP) DPIリペアキット	(ES) Juego de reparación DPI (SE) Reparationssats
(CN) 压差指示器维修包 (DE) DPI-Reparatursatz	(KR) DPI교환부품	P32KA00RQ

(UK) Lubricator (DE) Schmiergerät (KR) 루브리게이터
(CN) 油雾器 (IT) Lubrificatore (ES) Lubricador
(FR) Lubrificateur (JP) 潤滑油 (SE) Dimsmörjare

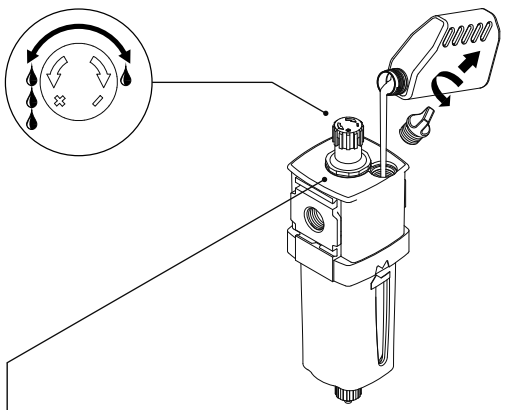

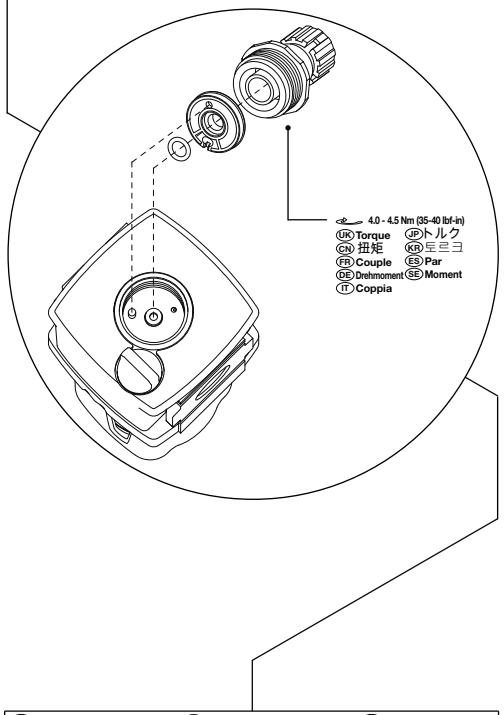

(UK) Sight Dome Assembly (CN) 视窗安装包 (FR) Dôme de visualisation (DE) Einbau der Sichtkuppel (IT) Gruppo vetro spia (JP) サイトドームアッセンブリ (KR) 관측자 교환부품	(ES) Montaje de mirilla	(SE) Synglas
	(UK) Polycarbonate (CN) 聚碳酸酯 (FR) Polycarbonate (DE) Polycarbonat (IT) Policarbonato (JP) ポリカーボネイト (KR) 폴리카보네이트 (ES) Policarbonato (SE) Polykarbonat	(UK) Nylon (CN) 尼龙 (FR) Nylon (DE) Nylon (IT) Nylon (JP) ナイロン (KR) 나일론 (ES) Nailon (SE) Nylon
P31 Mini	P31KA00PG	P31KA00PH
P32 Compact	P32KA00PG	P32KA00PH
P33 Standard	P32KA00PG	P32KA00PH

(UK) Do not use oils with additives, compounds, oils containing solvents, graphite, detergents or synthetic oils.

(CN) 不能使用含添加剂，混合物，溶解剂，石墨，清洁剂的油或者合成油

(FR) Ne pas utiliser d'huiles avec des additifs, contenant des solvants, du graphite, des détergents ou de l'huile synthétique.

(DE) Öle nicht zusammen mit Additiven, Verbundstoffen lösungsmittelhaltigen Ölsorten, Graphit, Waschmitteln oder Synthetikölen benutzen.

(IT) Non utilizzare oli con additivi, oli compositi contenenti solventi, grafite, detergenti oppure oli sintetici.

(JP) 混合、合成、溶剤、黒鉛、洗浄剤を含んだオイルは使用しないでください。

(KR) 첨가제, 합성유, 세척액과 함께 사용하거나 솔벤트를 함유한 오일과 유사윤활유를 사용하지 마십시오

(ES) No usar aceites con aditivos, compuestos, aceites con disolventes, grafito, detergentes ni aceites sintéticos.

(SE) Använd inte olja med tillsatser, kemiska föreningar, olja med lösningsmedel, grafit, rengöringsmedel eller syntetoljor.

(KR) ⚠ 경 고

예상하지 못한 인체의 위해나 제품의 치명적인 손상을 미연에 방지하기 위한 목적입니다 :

- 필요에 의해 조립이나 수리 또는 개조를 할 때는 공급전원을 차단하여 주십시요.
- 필요에 의해 조립이나 수리 또는 개조를 할 때는 에어공급을 차단하여 주십시요.
- 제품에 명시된 압력과 온도에 맞게 사용하시고 취급설명서에 따라주십시요.
- 동결을 방지하기 위해 완전 건조된 공기를 사용하여 주십시요.
- 수리를 위해 분해를 할 경우 취급설명서에 따라 주십시요.
- 조립이나 수리 또는 개조는 공기압에 대한 충분한 지식과 경험을 가진 사람이 해 주십시요.
- 조립이나 수리 또는 개조 후에는 압축공기와 전기를 접속하여 적절한 기능 검사 및 누설검사를 행해 주십시요. 만약 소리가 들릴 정도의 누설이 발생하거나 기기가 올바르게 작동하지 않는 경우는 사용하지 말고 바르게 조립되어 있는지 확인해 주십시요.
- 제품에 명시된 경고나 사양은 훼손되거나 가려져서는 안됩니다. 만약 불가피한 경우 담당 책임자에게 연락하여 주십시요.

(KR) ⚠ 경 고

적절하지 못한 제품의 선정이나 사용으로 치명적인 손상을 주거나 인체에 위해 할 수 있으며 사망에 이를 수도 있습니다.

취급설명서에 게재되어 있는 제품은 사용 조건이 다양하므로 그 시스템에서의 적합성의 결정은 시스템의 설계자 또는 사양을 결정하는 사람이 필요에 따라 분석과 테스트를 행한 후 결정해 주십시요. 이 시스템의 소기 성능, 안전성의 보증은 시스템의 적합성을 결정한 사람의 책임이 됩니다. 앞으로도 최신의 제품 카탈로그와 자료에 따라 모든 사양 내용을 검토하여 기기의 고장 가능성에 대한 상황을 고려하여 시스템을 구성하여 주십시요.

취급설명서에 게재되어 있는 제품의 특성, 사양, 디자인, 성능 그리고 가격은 예고 없이 언제라도 변경될 수 있습니다.

(KR) ⚠ 주 의

폴리카보네이트 보울은 투명하고 견고하여 필터나 루브리케이터에 사용하기에 이상적이며 일반 산업용에 적용하기에 적합합니다만 직사광선에 노출되거나 충격이 가해지는 장소와 온도범위를 벗어나는 곳에서의 사용은 피해야 합니다. 대부분의 플라스틱과 같이 일부 화학약품은 제품 손상의 원인이 될 수 있습니다. 폴리카보네이트 보울은 사염화탄소, 케톤, 초산 에스테르, 알콜에 노출되어서는 안되며 인산과 같은 내화성 유체로 윤활된 컴프레셔 에어 시스템에서 사용을 피해야 합니다.

메탈 보울은 폴리카보네이트 보울을 적용할 수 없는 환경에 권장됩니다. 메탈 보울은 대부분의 솔벤트에 대해 견딜 수 있지만 강산성이나 염도가 높은 환경은 피해 주십시요. 이런 환경에서 사용할 경우 공장 설비 담당자와 권장 사양에 대해 상의하여 주십시요.

폴리카보네이트 보울의 세척은 약 알칼리성 세제나 물을 사용하시고 절대 플라스틱에 손상을 줄 수 있는 아세톤, 벤젠, 카본 염화물, 가솔린, 톨루엔 등은 사용하지 말아 주십시요.

(KR) 안전지침

보다 많은 제품정보와 올바른 취급 사례에 대해서는 공압사업부 카탈로그의 "안전한 사용을 위한 안내"나 Parker 홈페이지에서 자료를 다운 받을 수 있습니다. Www.parker.com/safety

(KR) ⚠ 주 의

인체에 위해나 제품의 손상을 가져올 수 있는 폴리카보네이트 보울의 파손을 피하기 위해 과도한 압력이나 온도범위에서 사용하지 마십시요. 폴리카보네이트 보울은 150 PSIG (10bar)의 압력범위와 최대 125°F (52℃)에서 사용 가능합니다.

이 취급설명서를 장비에 첨가하거나 보전 매뉴얼을 위해 복사하여 사용하십시요. 필요한 경우 제품 취급점에 문의해 주십시요.

(ES) ⚠ ADVERTENCIA

Para evitar comportamientos del sistema que puedan causar accidentes y daños materiales:

- **Cuando proceda, desconectar la electricidad antes de la instalación, servicio o modificación.**
- **Desconectar el aire y despresurizar todas las líneas conectadas a este producto antes de la instalación, servicio o modificación.**
- **Trabajar con la presión, temperatura y demás condiciones recomendadas aquí por el fabricante.**
- **El aire no debe ser húmedo si la temp. ambiente es inferior a 0º C.**
- **Servicio según se indicada en estas instrucciones.**
- **La instalación, el servicio y la modificación de estos productos deben ser realizados por personal calificado con conocimientos de los productos neumáticos.**
- **Después de realizada la instalación, el servicio o la modificación, se debe conectar el aire y la electricidad (cuando proceda) y el producto probado para verificar un funcionamiento correcto sin fugas. Si se escucha una fuga o si el producto no funciona normalmente, no incorporar al uso normal.**
- **Las advertencias y especificaciones no deben ser tapadas con pintura o similar. Si no es posible protegerlas, contacte con el representante local para cambiar las etiquetas.**

(ES) ⚠ ADVERTENCIA

LA SELECCIÓN ERRÓNEA O INCORRECTA O EL USO INCORRECTO DE LOS PRODUCTOS Y/O SISTEMAS O DE OBJETOS RELACIONADOS, PUEDE CAUSAR MUERTES, HERIDAS Y AVERÍAS.

Este documento y demás información de La Compañía, sus filiales y distribuidores autorizados ofrece opciones de productos y sistemas para que los usuarios con los conocimientos técnicos necesarios profundicen sus análisis. Es importante que Ud. analice todos los aspectos de su aplicación, inclusive las posibles consecuencias de cualquier fallo y revise la información del producto o sistemas en el catálogo de productos correspondiente. Debido a la variedad de condiciones de funcionamiento y aplicaciones de estos productos y sistemas, el usuario, mediante sus propios análisis y pruebas, es el único responsable de realizar la selección final de los productos y sistemas y de garantizar el rendimiento, la seguridad y las advertencias necesarias de la aplicación.

La Compañía y sus subsidiarias se reservan el derecho de modificar en cualquier momento y sin previo aviso los productos descritos aquí, incluyendo sin limitación sus características y especificaciones, diseños, disponibilidad y precios.

(ES) ⚠ PRECAUCIÓN

Los recipientes de policarbonato, transparentes y robustos, son ideales para el uso con filtros y lubricadores. Son especiales para el uso en entornos industriales pero no deben ser colocados en lugares en que reciban luz solar directa, golpes de aire ni temperaturas fuera del rango estipulado. Como con la mayoría de los plásticos, algunos productos químicos pueden ser nocivos. Los recipientes de policarbonato no deben ser expuestos a hidrocarburos clorinados, ketones (cetonas), ésteres y ciertos alcoholes. No deben ser usados en sistemas de aire donde los compresores son lubricados con fluidos antiinflamables como por ejemplo ésteres de fosfato y diésteres. Usar recipientes de metal cuando las condiciones del entorno o del medio utilizado no sean compatibles con los de policarbonato. Los recipientes de metal resisten a la mayoría de los disolventes, pero no deben ser usados con ácidos ni álcalis fuertes o en atmósferas cargadas de sal. En estas condiciones consulte con la fábrica para recomendaciones especiales.

¡PARA LIMPIAR RECIPIENTES DE POLICARBONATO USAR SOLAMENTE AGUA Y JABÓN SUAVE! NO USAR agentes limpiadores como acetona, benceno, tetracloruro de carbono, gasolina, tolueno, etc. que afectan este plástico.

(ES) Guía de Seguridad

Para una información más detallada consultar la sección Guía de Seguridad de los catálogos de la Pneumatic Division o descargue la guía desde: www.parker.com/safety

(ES) ⚠ ADVERTENCIA

Evite la rotura de los recipientes de policarbonato que pueden causar heridas o averías respetando los límites de presión y temperatura. Los recipientes de policarbonato tienen un límite de presión de 10 bar (150 PSIG) y de temperatura de 52°C (125°F)

SE PUEDEN OBTENER COPIAS EXTRAS DE ESTAS INSTRUCCIONES PARA ADJUNTAR AL EQUIPO Y/O MANUALES DE MANTENIMIENTO QUE UTILIZAN ESTOS PRODUCTOS. TOME CONTACTO CON EL REPRESENTANTE LOCAL.

(SE) ⚠ VARNING!

Undvika oförutsett systembeteende som kan leda till person- och sakskada:

- **Koppla vid behov ur strömförsörjningen innan installations-, service- eller ombyggnadsarbete påbörjas.**
- **Koppla ur tryckluftförsörjningen och tryckavlasta alla luftledningar som är anslutna till den här produkten innan installations-, service- eller ombyggnadsarbete påbörjas.**
- **Se till att tillverkarens föreskrivna tryck, temperatur och andra förhållanden som definieras i de här instruktionerna följs.**
- **Mediet måste vara fuktfritt om omgivningstemperaturen är lägre än noll grader.**
- **Service skall utföras på det sätt som beskrivs i de här instruktionerna.**
- **Installation, service och ombyggnad av dessa produkter skall utförs av kunnig personal som förstår hur pneumatiska produkter används.**
- **När installations-, service- eller ombyggnadsarbetet är klart skall tryckluft- och strömförsörjning (när sådan krävs) kopplas in och produkten funktionsprovas och läcksökas. Produkten får inte tas i drift vid hörbart läckage eller om den inte fungerar korrekt.**
- **Varningar och specifikationer på produkten får inte målas över. Om det inte är möjligt att maskera sådan märkning vid målning, bör du kontakta vår lokale representant för att få nya skyltar.**

(SE) ⚠ VARNING!

FELAKTIGT ELLER OLÄMPLIGT VAL OCH OLÄMPLIG ANVÄNDNING AV PRODUKTER OCH/ELLER SYSTEM SOM BESKRIVS HÄRI ELLER AV KRINGUTRUSTNING, KAN ORSAKA PERSON- OCH SAKSKADA OCH T O M DÖDSFALL.

Detta dokument och annan information från företaget, dess dotterbolag och auktoriserade återförsäljare innehåller förslag på produkter och system, för närmare analys av användare med tekniska specialkunskaper. Det är viktigt att analysera alla aspekter på din applikation, inklusive konsekvenserna av ett maskinfel, och noggrant läsa informationen om produkten eller systemet i aktuell produktkatalog. Beroende på de olika driftförhållandena och tillämpningarnaför dessa produkter och system, så ansvarar användaren helt själv, genom egna analyser och provning, för det slutgiltiga valet av system och komponenter, och för att förvissa sig om att uppfylla alla krav på funktion, hållbarhet, underhåll, säkerhet och varningstexter för den avsedda tillämpningen.

De produkter som beskrivs häri, inklusive, dock utan att begränsas därtill, samtliga produktfunktioner, specifikationer och konstruktioner samt alla uppgifter om tillgänglighet och prissättning kan när som helst komma att ändras av företaget eller dess dotterbolag, utan föregående meddelande därom.

(SE) ⚠ OBSERVERA!

Behållare och synglas av polykarbonat, som är både genomskinligt och starkt, är idealiska för användning på filter och dimsmörjare. De är lämpliga för användning i vanlig industrimiljö, men bör inte placeras på platser där de kan utsättas för direkt solljus, slag eller temperaturer utanför föreskrivet temperaturområde. Polykarbonat kan ta skada vid kontakt med vissa kemikalier, precis om de flesta andra plaster. Kärl och synglas av polykarbonat bör inte exponeras för klorerade kolväten, ketoner, estrar eller alkoholer. De bör inte användas i luftsystem där kompressorerna smörjs med brandbeständig vätska, t ex fosfatestrar eller diestrar.

Vi rekommenderar metallkärl när miljön och/eller mediet är sådant att kärl av polykarbonat kan ta skada. Metallkärl klarar de flesta sådana lösningsmedel, men bör inte användas vid förekomst av starka syror eller baser och inte i atmosfär med hög salthalt. Rekommendationer för sådana förhållanden kan fås från fabriken.

ANVÄND BARA MILD TVÅLLÖSNING MED VATTEN VID RENGÖRING AV KÄRL AV POLYKARBONAT! Använd INTE sådana rengöringsmedel som aceton, benzen, koltetraklorid, bensin, toluen eller liknande, som är skadliga för den här typen av plast.

(SE) Säkerhetsguide

I avsnitten om säkerhet i pneumatikdivisionens kataloger hittar du mer information och riktlinjer. Denna information och dessa riktlinjer finns även på vår webbsida på adressen: www.parker.com/safety

(SE) ⚠ VARNING!

Förhindra polykarbonatkärl att gå sönder och orsaka person- eller sakskada genom att se till att föreskrivna tryck och temperaturer inte överskrids. Polykarbonatkärl är tryckklassade för 10 bar och en maxtemperatur på 52 °C.

DESSA INSTRUKTIONER KAN FÅS I SÄRTRYCK, FÖR ATT BIFOGAS DRIFT- OCH UNDERHÅLLSINSTRUKTIONER. KONTAKTA I SÅ FALL DIN LOKALE PARKERREPRESENTANT.

(UK) Product Connection + Mounting (FR) Raccordement + Montage du produit (IT) Collegamento e montaggio del prodotto (KR) 제품의 조합과 취부 (SE) Montering och inkoppling
(CN) 产品接头+安装 (DE) Produktanschluss und -einbau (JP) コンビネーションの組立及び取り付け (ES) Montaje y conexión del producto

(UK) Individual Product Brackets
(CN) 单个产品支架
(FR) Éléments de fixation pour produits isolés
(IT) Staffe separate
(DE) Spezielle Produkthalterungen
(JP) 単体用ブラケット
(KR) 유니트 개별 취부 브라켓
(ES) Sujeciones producto individual
(SE) Separata klammor

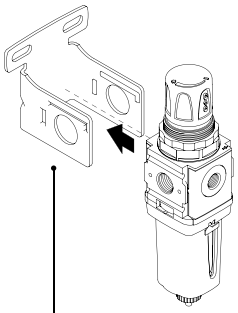

P31 Mini
(UK) Mounting Bracket (CN) 安装支架 (FR) Console (DE) Einbauhalterung (IT) Staffa di montaggio (JP) Cブラケット (KR) ㄷ형 취부 브라켓 (ES) Sujeción de montaje (SE) Monteringskonsol
P31KA00MW

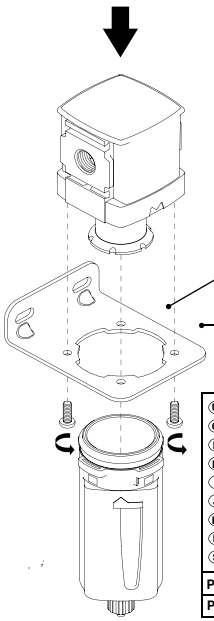

(UK) L-Bracket
(CN) 角架
(FR) Équerre
(DE) Winkelhalterung
(IT) Staffa angolare
(JP) Lブラケット
(KR) L 형 취부 브라켓
(ES) Sujeción angulada
(SE) Vinkelklamma

P32 Compact	P32KA00ML
P33 Standard	P33KA00ML

(UK) L-Bracket
(CN) 角架
(FR) Équerre
(DE) Winkelhalterung
(IT) Staffa angolare
(JP) Lブラケット
(KR) L 형 취부 브라켓
(ES) Sujeción angulada
(SE) Vinkelklamma

(UK) Torque (CN) 扭矩 (FR) Couple (DE) Drehmoment (IT) Coppia (JP) トルク (KR) 토르크 (ES) Par (SE) Moment

P32 Compact	P32KA00ML	3.5 Nm (31 lbf-in)
P33 Standard	P33KA00ML	3.7 Nm (33 lbf-in)

P31 Mini

(UK) Body Connector
(CN) 主体接头
(FR) Élément de liaison
(DE) Gehäusestecker
(IT) Connettore del corpo
(JP) ポートブロック
(KR) 바디 컨넥터
(ES) Conector de cuerpo
(SE) Husanslutning

P31KA00CB

(UK) Body Connector + Wall Mounting Bracket
(CN) 主体接头 + 墙壁安装支架
(FR) Élément de liaison + Équerre de fixation murale
(DE) Gehäusestecker und Wandhalterung
(IT) Connettore del corpo + staffa di montaggio a muro
(JP) ボディコネクタ+Tブラケット
(KR) 바디 컨넥터 + 취부 브라켓
(ES) Conector de cuerpo + Sujeción de muro
(SE) Husanslutning + väggfäste

P31KA00MT

(UK) Port Connector
(CN) 接口接头
(FR) Raccord
(DE) Anschluss-Stutzen
(IT) Connettore per porta
(JP) ポートブロック
(KR) 포트블럭
(ES) Conectores de bocas
(SE) Anslutningsport

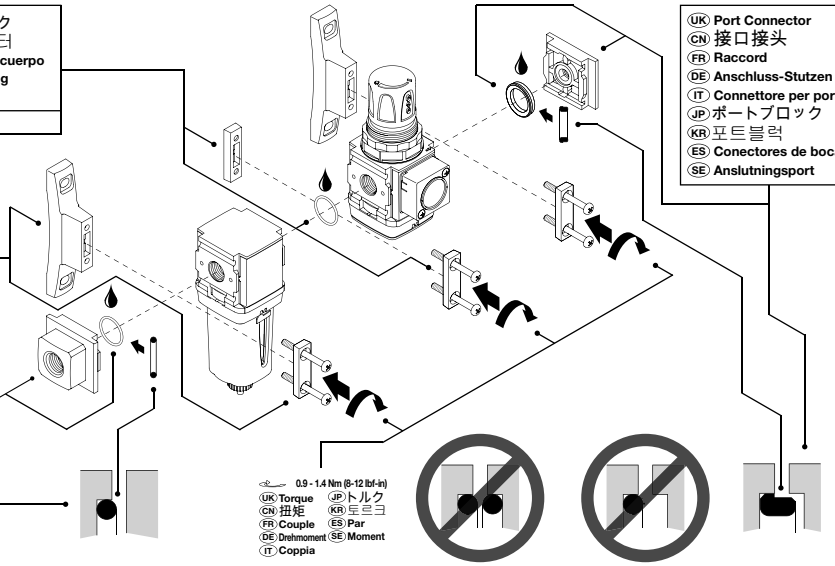

0.9 - 1.4 Nm (8-12 lbf-in)
(UK) Torque (CN) 扭矩 (FR) Couple (DE) Drehmoment (IT) Coppia (JP) トルク (KR) 토르크 (ES) Par (SE) Moment

(UK) Port Connector
(CN) 接口接头
(FR) Raccord
(DE) Anschluss-Stutzen
(IT) Connettore per porta
(JP) ポートブロック
(KR) 포트블럭
(ES) Conectores de bocas
(SE) Anslutningsport

P32 Compact + P33 Standard

2.2 - 2.4 Nm (19-21 lbf-in)
(UK) Torque (CN) 扭矩 (FR) Couple (DE) Drehmoment (IT) Coppia (JP) トルク (KR) 토르크 (ES) Par (SE) Moment

(UK) Body Connector + Wall Mounting Bracket
(CN) 主体接头 + 墙壁安装支架
(FR) Élément de liaison + Équerre de fixation murale
(DE) Gehäusestecker und Wandhalterung
(IT) Connettore del corpo + staffa di montaggio a muro
(JP) ボディコネクタ+Tブラケット
(KR) 바디 컨넥터 + 취부 브라켓
(ES) Conector de cuerpo + Sujeción de muro
(SE) Husanslutning + väggfäste

P32 Compact	P32KA00MT
P33 Standard	P32KA00MT

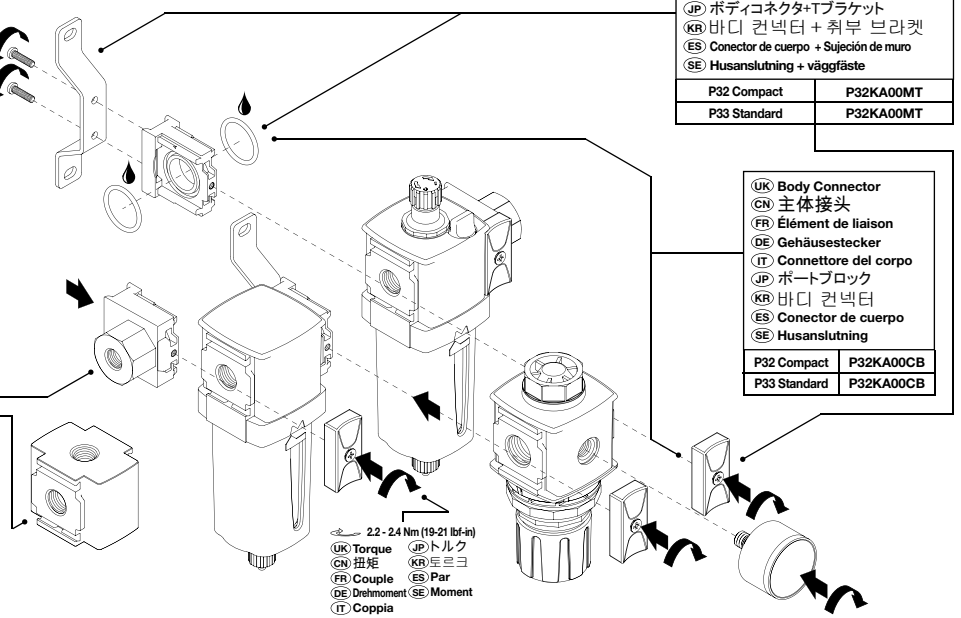

(UK) Port Connector
(CN) 接口接头
(FR) Raccord
(DE) Anschluss-Stutzen
(IT) Connettore per porta
(JP) ポートブロック
(KR) 포트블럭
(ES) Conectores de bocas
(SE) Anslutningsport

(UK) Body Connector
(CN) 主体接头
(FR) Élément de liaison
(DE) Gehäusestecker
(IT) Connettore del corpo
(JP) ポートブロック
(KR) 바디 컨넥터
(ES) Conector de cuerpo
(SE) Husanslutning

P32 Compact	P32KA00CB
P33 Standard	P32KA00CB

(UK) Manifold Block
(CN) 分气块
(FR) Bloc d'ilots
(DE) Sammelsystemleiste
(IT) Blocco manifold
(JP) マニホールドブロック
(KR) 매니폴드 블록
(ES) Bloque de manifold
(SE) Anslutningsblock

2.2 - 2.4 Nm (19-21 lbf-in)
(UK) Torque (CN) 扭矩 (FR) Couple (DE) Drehmoment (IT) Coppia (JP) トルク (KR) 토르크 (ES) Par (SE) Moment

(UK) Regulator + Filter/Regulator Angle Bracket
(CN) 单个产品支架
(FR) Équerre pour Régulateur + Filtre/Régulateur
(DE) Winkelhalterung für Regler + Filter/Regler
(IT) Staffa angolare per regolatore + filtro/regolatore
(JP) 単体用ブラケット
(KR) 유니트 개별 취부 브라켓
(ES) Sujeción angulada Regulador + Filtro/Regulador
(SE) Regulator + vinkelklamma för filter/regulator

(UK) Panel Mounting Ring
(CN) 面板安装螺母
(FR) Écrou pour montage sur panneau
(DE) Schalttafel-Schraubring
(IT) Anello di montaggio su pannello
(JP) パネルマウントリング
(KR) 판넬 마운팅 넛트
(ES) Aro de montaje en panel
(SE) Ring för panelmontering

	(UK) Plastic Nut (CN) 塑料螺母 (FR) Écrou en plastique (DE) Kunststoffmutter (IT) Dado in plastica (JP) プラスチックナット (KR) 플라스틱 넛트 (ES) Tuerca plástica (SE) Plastmutter	(UK) Metal Nut (CN) 金属螺母 (FR) Écrou métallique (DE) Metallmutter (IT) Dado in metallo (JP) アルミニウムナット (KR) 네탈 넛트 (ES) Tuerca metálica (SE) Metallmutter
P31 Mini	P31KA00MP	P31KA00MM
P32 Compact	P32KA00MP	P32KA00MM
P33 Standard	P33KA00MP	P33KA00MM

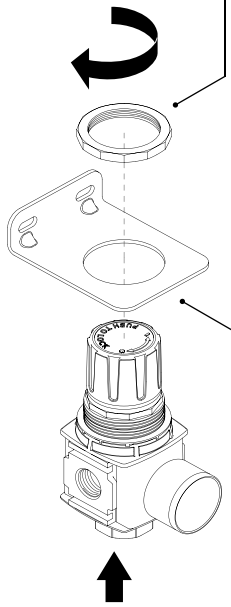

(UK) Angle Bracket
(CN) 角架
(FR) Équerre
(DE) Winkelhalterung
(IT) Staffa angolare
(JP) アングルブラケット
(KR) L 형 취부 브라켓
(ES) Sujeción angulada
(SE) Vinkelklamma

P31 Mini	P31KA00MR
P32 Compact	P32KA00MR
P33 Standard	P33KA00MR

P3Y 3/4” & 1” Series

Fixation - Mounting - Befestigung - Fijacion - Fissaggio

UK Disconnect air & electrical supplies before attempting repair or maintenance See ISO4414 for safety requirements covering the installation and use of pneumatic equipment.

FR Débrancher les connexions pneumatiques et électriques avant reparation ou maintenance. Voir ISO4414 pour les règles de sécurité des installations et utilisation des équipments pneumatiques.

DE Bei Repartur - oder Wartungsarbeiten sind alle pneumatischen und elektrischen Versorgungsleitungen zuvor vom Zylinder zu trennen. Siehe ISO4414 bzw.DIN 24 558 bezüglich Sicherheits-Anforderungen für den Bereich installation und Gebrauch von Pneumatik-Komponenten.

SE Koppla ifrån luft och elektriska anslutningar innan reparation- eller underhållsarbeten påborjas. Se ISO4414 for säkerhetsbestämmeiser täckande installation och användande av pneumatisk utrustning.

ES Desconectar las conexiones neumaticos y eléctricas antes de efectuar cualquier reparacion o mantenimiento. Ver ISO4414 para reglas de segúridad de las instalaciones y utilizacion de equiptos neumäticaos.

IT Prima di eseguire interventi di manutenzione verificare che sia l’alimentazione elettrica che pneumatica siano disattivate. Attenersi alla nomativa ISO4414 che regola l’installazione e l’uso di componenti pneumatici.

Coupling Kit
Kupplungssatz

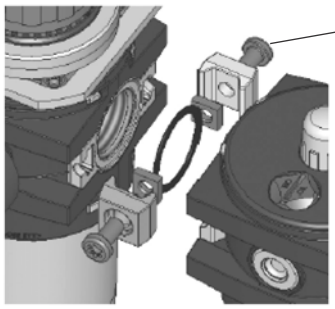

Association - Combination - Verbindung - Asociacion - Assemblaggio

⚠ WARNING

To avoid unpredictable system behavior that can cause personal injury and proper damage:

- Disconnect electrical supply (when necessary) before installation, servicing, or conversion.
- Disconnect air supply and depressurize all air lines connected to this product before installation, servicing or conversion.
- Operate within the manufacturer’s specified pressure, temperature, and other conditions listed in these instructions.
- Medium must be moisture-free if ambient temperature is below freezing.
- Service according to procedures listed in these instructions.
- Installation, service and conversion of these products must be performed by knowledgeable personnel who understand how pneumatic products are to be applied.
- After installation, servicing or conversion, air and electrical supplies (when necessary) should be connected and the product tested for proper function and leakage. If audible leakage is present or the product does not operate properly, do not put into use.
- Warning and specifications on the product should not be covered by paint, etc. If masking is not possible, contact your local representative for replacement lables.

⚠ WARNING

Product rupture can cause serious injury.

Do not connect regulator to bottled gas.

Do not exceed maximum primary pressure rating.

⚠ WARNING

FAILURE OR IMPROPER SELECTION OR IMPROPER USE OF THE PRODUCTS AND/OR SYSTEMS DESCRIBED HEREIN OR RELATED ITEMS CAN CAUSE DEATH, PERSONAL INJURY AND PROPERTY DAMAGE.

This document and other information from the Company, its subsidiaries and authorised distributors provide product and/or system options for further investigation by users having technical expertise. It is important that you analyze all aspects of your application, including consequences of any failure and review the information concerning the product or systems in the current product catalogue. Due to the variety of operating conditions and applications for these products or systems, the user, through its own analysis and testing, is solely responsible for making the final selection of the products and systems and assuring that all performance, safety and warning requirements of the application are met.

The products described herein, including without limitation, product features, specifications, designs, availability and pricing, are subject to change by The Company and its subsidiaries at any time without notice.

Réglage - Adjustment - Steverung - Regulacion - Regolazione

Service kits

Diaphragm kit - relieving type	= **P3YKA00RR**
Diaphragm kit - non-relieving type	= **P3YKA00RN**

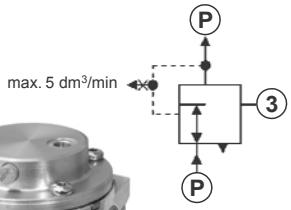

Connector M12 x 1

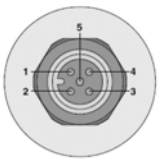

Pin 1:
Power supply
Plus +24 V DC ± 10%
0.15 A
Residual ripple 10%

Pin 2:
Power supply 0 V
Reference and mass capacity for set value and actual value

Pin 3:
Set value output
0-10 V

Pin 4:
0 V target signal
(connected on board with pin 2 as standard)

Pin 5:
Analog actual value output
0-10 V
Tolerance ± 0.15 V

Analog voltage

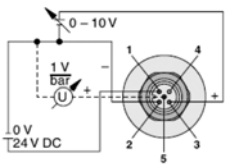

With a single potentiometer

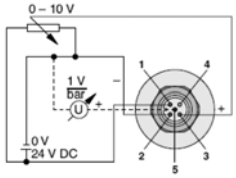

The resistance of the potentiometer should range between 500 Ω and 100 Ω

PLC in connection with several potentiometers

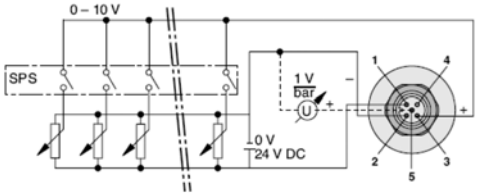

The total resistance of the potentiometer series should not be less than 500 Ω

Filter Maintenance - Maintenance du filtre - Wartung - Mantenimiento - Manutenzione

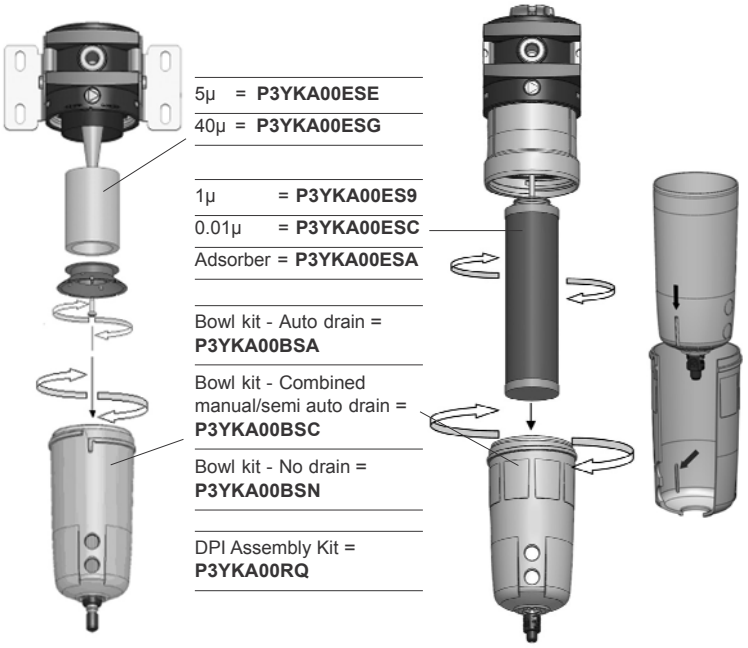

Condensate drainage / Purge /Kondensatentleerung /Svuotamento condensati/ Vaciado del condensado / odpouštění kondenzátu / spust kondensatu

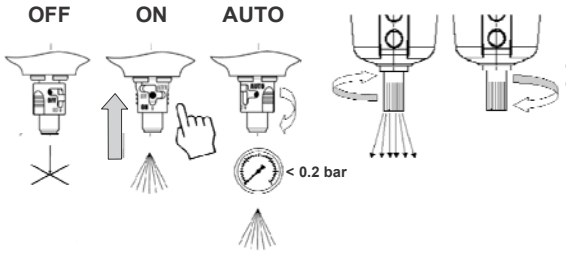

Automatik fully
automatic
automatique
completamente automatico
completamente automático
automatické
automatyczny

Lubricator Adjustment - Réglage du lubrificateur - Steverung Regulacion - Regolazione

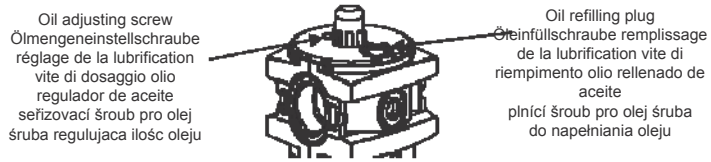

Refill plug kit	=	**P3YKA00PL**
Oil VG32 1L	=	**P3YKA00PPBB**

Recommended Lubricants / Lubrifiants recommandés / Empfohlene Ölsorten / Lubrificanti consigliati / Lubricantes recomendados / Rekommenderade oljor för dimsmörjare

Lubrication of airlines

High speed tools and systems
Outils et systèms rapides
Hochgeschwindigkeits-Werkzeuge und Systeme
Utensili ad alta velocita' e sistemi
Herramientas de alta velocidad y Sistemas
Hogvarviga verktyg och system

Air Cylinders and Valves
Vérins et distributeurs pneumatiques
Pneumatik-Zylinder und Ventile
Cilindri pneumatici e valvole
Cilindros y válvulas neumáticos
Pneumatiska cylindrar och ventiler

Oil Company	ISO Grade	Grade	ISO Grade	Grade
Gulf	Harmony 38AW	15	Harmony 43AW	32
Shell (UK) Oil	Tellus 22	22	Tellus 37	37
Burmah Castrol	Hyspin AWS15	15	Hyspin AWS32	32
Edgar Vaughan	KSO 5L	10	Hydrodrive HP100	32
Esso Petroleum	NUTO 1115	15	NUTO H32	32
B.P.	HLP 22	22	HLP 32	32
Mobile Oil Company	Velocite No.6	10	DTE Oil - Light	32
Shell	Cassida Fluid HF*	32		
Klüberoil	4UH1*	32		

* For food industry applications : approved oil USDA-H1

Do not use oils with additives, compounds oils containing solvents, graphite, detergents.
The use of synthetic oils and antifreeze with a Glycol concentration of 100% can be used.

Combined Soft Start & Dump Valve / Soft Start Valve / Vannes de mise en pression progressive et de purge / Sanftanlauf + Abschalt-Ventile / Mjukstartventiler / Válvulas de arranque progresivo / Valvole Avviamento Progressivo

The allen key adjusts flow through the valve until the set point is reached, after which full pressure is achieved.

Le débit est réglable par la clé Allen, jusqu'à la valeur consigne qui déclenche le plein passage

Mjukstartsflödet kan justeras med insexnyckel. Vid uppnått omställningstryck öppnar sedan ventilen för fullt flöde.

Utilizar la Llave Allen para regular el caudal de la válvula hasta lograr la presión tarada - de esta forma se proporciona el flujo máximo de aire.

La chiave Allen regola il flusso attraverso la valvola fino al raggiungimento del valore impostato, quindi viene inserita la pressione totale.

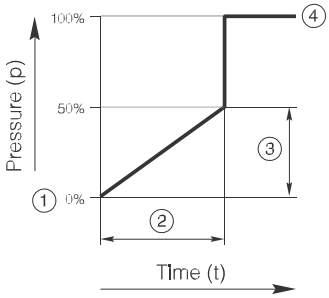

Soft start is 50% pressure dependant on P1

1. Start signal
   Démarrage
   Start-Signal
   Startsignal
   Señal de arranque
   Segnale di start
2. Switching time delay
   Signal temporisé
   Schaltzeit-Verzögerung
   Omställningstid
   Tiempo de arranque
   Ritardo commutazione
3. Gradual pressure build up
   Mise en pression progressive
   Allmählicher Druckaufbau
   Uppbyggnadstryck
   Aumento gradual de la presión
   Incremento graduale della pressione
4. Operating pressure p^2 (=p^1)
   Pression de fonctionnement p^2 (=p^1)
   Betriebsdruck p^2 (=p^1)
   Arbetstryck p^2 (=p^1)
   Presión de funcionamiento p^2 (=p^1)
   Pressione di esercizio p^2 (=p^1)

Combined start/stop function

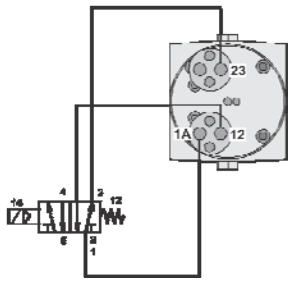

Combined start/stop function with acknowledgement

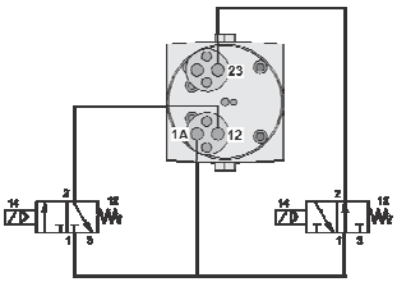

Ball Valve

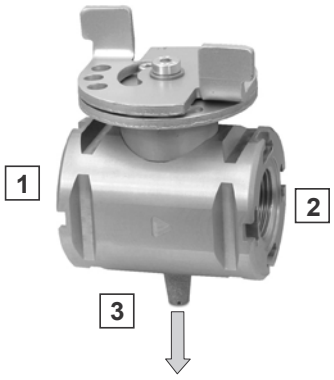

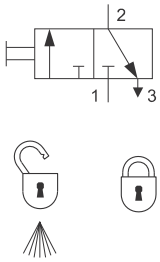

Pneumatic Division
Richland, Michigan 49083
269-629-5000

PDNSG-1
Pneumatic Division Safety Guide
ISSUED: August 1 , 2006
Supersedes: June 1, 2006

Safety Guide For Selecting And Using Pneumatic Division Products And Related Accessories

⚠ WARNING:

FAILURE OR IMPROPER SELECTION OR IMPROPER USE OF PNEUMATIC DIVISION PRODUCTS, ASSEMBLIES OR RELATED ITEMS ("PRODUCTS") CAN CAUSE DEATH, PERSONAL INJURY, AND PROPERTY DAMAGE. POSSIBLE CONSEQUENCES OF FAILURE OR IMPROPER SELECTION OR IMPROPER USE OF THESE PRODUCTS INCLUDE BUT ARE NOT LIMITED TO:

- Unintended or mistimed cycling or motion of machine members or failure to cycle
- Work pieces or component parts being thrown off at high speeds.
- Failure of a device to function properly for example, failure to clamp or unclamp an associated item or device.
- Explosion
- Suddenly moving or falling objects.
- Release of toxic or otherwise injurious liquids or gasses.

Before selecting or using any of these Products, it is important that you read and follow the instructions below.

1. GENERAL INSTRUCTIONS

1.1. Scope: This safety guide is designed to cover general guidelines on the installation, use, and maintenance of Pneumatic Division Valves, FRLs (Filters, Pressure Regulators, and Lubricators), Vacuum products and related accessory components.

1.2. Fail-Safe: Valves, FRLs, Vacuum products and their related components can and do fail without warning for many reasons. Design all systems and equipment in a fail-safe mode, so that failure of associated valves, FRLs or Vacuum products will not endanger persons or property.

1.3 Relevant International Standards: For a good guide to the application of a broad spectrum of pneumatic fluid power devices see: ISO 4414:1998, Pneumatic Fluid Power – General Rules Relating to Systems. See www.iso.org for ordering information.

1.4. Distribution: Provide a copy of this safety guide to each person that is responsible for selection, installation, or use of Valves, FRLs or Vacuum products. Do not select, or use Parker valves, FRLs or vacuum products without thoroughly reading and understanding this safety guide as well as the specific Parker publications for the products considered or selected.

1.5. User Responsibility: Due to the wide variety of operating conditions and applications for valves, FRLs, and vacuum products Parker and its distributors do not represent or warrant that any particular valve, FRL or vacuum product is suitable for any specific end use system. This safety guide does not analyze all technical parameters that must be considered in selecting a product. The user, through its own analysis and testing, is solely responsible for:

- Making the final selection of the appropriate valve, FRL, Vacuum component, or accessory.
- Assuring that all user's performance, endurance, maintenance, safety, and warning requirements are met and that the application presents no health or safety hazards.
- Complying with all existing warning labels and / or providing all appropriate health and safety warnings on the equipment on which the valves, FRLs or Vacuum products are used; and,
- Assuring compliance with all applicable government and industry standards.

1.6. Safety Devices: Safety devices should not be removed, or defeated.

1.7. Warning Labels: Warning labels should not be removed, painted over or otherwise obscured.

1.8. Additional Questions: Call the appropriate Parker technical service department if you have any questions or require any additional information. See the Parker publication for the product being considered or used, or call 1-800-CPARKER, or go to www.parker.com, for telephone numbers of the appropriate technical service department.

2. PRODUCT SELECTION INSTRUCTIONS

2.1. Flow Rate: The flow rate requirements of a system are frequently the primary consideration when designing any pneumatic system. System components need to be able to provide adequate flow and pressure for the desired application.

2.2. Pressure Rating: Never exceed the rated pressure of a product. Consult product labeling, Pneumatic Division catalogs or the instruction sheets supplied for maximum pressure ratings.

2.3. Temperature Rating: Never exceed the temperature rating of a product. Excessive heat can shorten the life expectancy of a product and result in complete product failure.

2.4. Environment: Many environmental conditions can affect the integrity and suitability of a product for a given application. Pneumatic Division products are designed for use in general purpose industrial applications. If these products are to be used in unusual circumstances such as direct sunlight and/or corrosive or caustic environments, such use can shorten the useful life and lead to premature failure of a product.

2.5. Lubrication and Compressor Carryover: Some modern synthetic oils can and will attack nitrile seals. If there is any possibility of synthetic oils or greases migrating into the pneumatic components check for compatibility with the seal materials used. Consult the factory or product literature for materials of construction.

2.6. Polycarbonate Bowls and Sight Glasses: To avoid potential polycarbonate bowl failures:

- Do not locate polycarbonate bowls or sight glasses in areas where they could be subject to direct sunlight, impact blow, or temperatures outside of the rated range.
- Do not expose or clean polycarbonate bowls with detergents, chlorinated hydro-carbons, keytones, esters or certain alcohols.
- Do not use polycarbonate bowls or sight glasses in air systems where compressors are lubricated with fire resistant fluids such as phosphate ester and di-ester lubricants.

2.7. Chemical Compatibility: For more information on plastic component chemical compatibility see Pneumatic Division technical bulletins Tec-3, Tec-4, and Tec-5

2.8. Product Rupture: Product rupture can cause death, serious personal injury, and property damage.
- Do not connect pressure regulators or other Pneumatic Division products to bottled gas cylinders.
- Do not exceed the maximum primary pressure rating of any pressure regulator or any system component.
- Consult product labeling or product literature for pressure rating limitations.

3. PRODUCT ASSEMBLY AND INSTALLATION INSTRUCTIONS

3.1. Component Inspection: Prior to assembly or installation a careful examination of the valves, FRLs or vacuum products must be performed. All components must be checked for correct style, size, and catalog number. DO NOT use any component that displays any signs of nonconformance.

3.2. Installation Instructions: Parker published Installation Instructions must be followed for installation of Parker valves, FRLs and vacuum components. These instructions are provided with every Parker valve or FRL sold, or by calling 1-800-CPARKER, or at www.parker.com.

3.3. Air Supply: The air supply or control medium supplied to Valves, FRLs and Vacuum components must be moisture-free if ambient temperature can drop below freezing

4. VALVE AND FRL MAINTENANCE AND REPLACEMENT INSTRUCTIONS

4.1. Maintenance: Even with proper selection and installation, valve, FRL and vacuum products service life may be significantly reduced without a continuing maintenance program. The severity of the application, risk potential from a component failure, and experience with any known failures in the application or in similar applications should determine the frequency of inspections and the servicing or replacement of Pneumatic Division products so that products are replaced before any failure occurs. A maintenance program must be established and followed by the user and, at minimum, must include instructions 4.2 through 4.10.

4.2. Installation and Service Instructions: Before attempting to service or replace any worn or damaged parts consult the appropriate Service Bulletin for the valve or FRL in question for the appropriate practices to service the unit in question. These Service and Installation Instructions are provided with every Parker valve and FRL sold, or are available by calling 1-800-CPARKER, or by accessing the Parker web site at www.parker.com.

4.3. Lockout / Tagout Procedures: Be sure to follow all required lockout and tagout procedures when servicing equipment. For more information see: OSHA Standard – 29 CFR, Part 1910.147, Appendix A, The Control of Hazardous Energy – (Lockout / Tagout)

4.4. Visual Inspection: Any of the following conditions requires immediate system shut down and replacement of worn or damaged components:
- Air leakage: Look and listen to see if there are any signs of visual damage to any of the components in the system. Leakage is an indication of worn or damaged components.
- Damaged or degraded components: Look to see if there are any visible signs of wear or component degradation.
- Kinked, crushed, or damaged hoses. Kinked hoses can result in restricted air flow and lead to unpredictable system behavior.
- Any observed improper system or component function: Immediately shut down the system and correct malfunction.
- Excessive dirt build-up: Dirt and clutter can mask potentially hazardous situations.

Caution: Leak detection solutions should be rinsed off after use.

4.5. Routine Maintenance Issues:
- Remove excessive dirt, grime and clutter from work areas.
- Make sure all required guards and shields are in place.

4.6. Functional Test: Before initiating automatic operation, operate the system manually to make sure all required functions operate properly and safely.

4.7. Service or Replacement Intervals: It is the user's responsibility to establish appropriate service intervals. Valves, FRLs and vacuum products contain components that age, harden, wear, and otherwise deteriorate over time. Environmental conditions can significantly accelerate this process. Valves, FRLs and vacuum components need to be serviced or replaced on routine intervals. Service intervals need to be established based on:
- Previous performance experiences.
- Government and / or industrial standards.
- When failures could result in unacceptable down time, equipment damage or personal injury risk.

4.8. Servicing or Replacing of any Worn or Damaged Parts: To avoid unpredictable system behavior that can cause death, personal injury and property damage:
- Follow all government, state and local safety and servicing practices prior to service including but not limited to all OSHA Lockout Tagout procedures (OSHA Standard – 29 CFR, Part 1910.147, Appendix A, The Control of Hazardous Energy – Lockout / Tagout).
- Disconnect electrical supply (when necessary) before installation, servicing, or conversion.
- Disconnect air supply and depressurize all air lines connected to system and Pneumatic Division products before installation, service, or conversion.
- Installation, servicing, and / or conversion of these products must be performed by knowledgeable personnel who understand how pneumatic products are to be applied.
- After installation, servicing, or conversions air and electrical supplies (when necessary) should be connected and the product tested for proper function and leakage. If audible leakage is present, or if the product does not operate properly, do not put product or system into use.
- Warnings and specifications on the product should not be covered or painted over. If masking is not possible, contact your local representative for replacement labels.

4.9. Putting Serviced System Back into Operation: Follow the guidelines above and all relevant Installation and Maintenance Instructions supplied with the valve FRL or vacuum component to insure proper function of the system.