AIR PREPARATION SYSTEM
P31, P32, P33 & P3Y SERIES

Modular & Body Ported 1/4 to 3/4
Body Ported 3/4 & 1, with Port Blocks 1.1/4 & 1.1/2

Parker

RoHS COMPLIANT

DECLARATION OF COMPLIANCE (ROHS)

European Directive 2011/65/EU – RoHS (Restriction us of certain Hazardous Substances in electrical and electronic equipment), restricts the use of the 6 substances in the manufacture of specified electrical equipment.

Lead: Product containing lead and its compound (except for applications of lead as an alloying element by weight in steel up to 0.35%, in aluminum up to 0.4% and in copper alloys up to 4% and in circuit board solder) must not exceed 0.1% by weight

Mercury: The concentration level must not exceed 0.1% by volume

Cadmium: The concentration level must not exceed 0.01% by volume

Hexavalent Chromiou:

This is a corrosive protective finish used on our product line. Where this finish is utilized the Chromate solution is Hexavalent (Chrome 6) free.

Polybrominated Biphenyls (PBB):

The concentration level must not exceed 0.1% by weight. This substance is not know to be in any of our products.

Polybrominated Diphenyl Esters (PBDE):

The concentration level must not exceed 0.1% by weight. This substance is not know to be in any of our products.

CE

Global Air Preparation products supplied by Parker Hannifin have been designed and manufactured in accordance with "sound engineering practice", as defined by Article 3 of Pressure Equipment Directive 97/23/EC.

REACh Compliant

Global Air Preparation product range is in compliance with REACH to ensure continued compliance additions to the list of SVHC (Substance of Very High Concern) are reviewed periodically.

ATEX

Following Ignition Hazard Assessments performed on the non-electrical products listed above, in accordance with the requirements of ISO/IEC/EN 80079-36), it was considered that the equipment does not contain its own source of ignition, and therefore is not within the scope of directive 2014/34/EU.

The products can be used in a Group II Category 2 environment assuming that the ATEX Directive and the following conditions are complied with:

- Installation and maintenance of the product must be undertaken by qualified personnel.
- Do not mount the products in an area where impact may occur.
- Filters must be used to limit the introduction of particles and to capture particles generated in service.
- Supply air quality must be within ISO 8573-1:2010 Class 6.4.4.
- Maximum working temperature to be as stated on product label.
- WARNING – pulsating pressure and/or a closed circuit can generate heat.
- Deposits of dust on the product must not exceed 5mm thickness. Refer to technical file for surface areas of plastics. The unit must be earthed via the compressed air supply line.
- The unit must not come into contact with liquid solvents, acids or alkalis Refer to technical file for chemicals known to be incompatible. Product cleaning must be undertaken using a method complying with the specifications of the ATEX zone, preferably by using mild soap and water or antistatic products.
- Regulators, Filter Regulators: Do not use Regulators or Filter Regulators within systems that can create vibration within the Regulator / Filter Regulator unit.
- Technical file available on request.

ISO

Global Air Preparation product range has been designed and tested in accordance with ISO flow testing, envelope integrity, and catalog data presented.

- Filters – ISO 5782-1 & ISO 5782-2: 1997
- Regulators- ISO 6953-1 & ISO 6953-2: 2000
- Lubricators- ISO 6301-1 & ISO 6301-2: 2009

WARNING — USER RESPONSIBILITY

FAILURE OR IMPROPER SELECTION OR IMPROPER USE OF THE PRODUCTS DESCRIBED HEREIN OR RELATED ITEMS CAN CAUSE DEATH, PERSONAL INJURY AND PROPERTY DAMAGE.

- This document and other information from Parker-Hannifin Corporation, its subsidiaries and authorized distributors provide product or system options for further investigation by users having technical expertise.
- The user, through its own analysis and testing, is solely responsible for making the final selection of the system and components and assuring that all performance, endurance, maintenance, safety and warning requirements of the application are met. The user must analyze all aspects of the application, follow applicable industry standards, and follow the information concerning the product in the current product catalog and in any other materials provided from Parker or its subsidiaries or authorized distributors.
- To the extent that Parker or its subsidiaries or authorized distributors provide component or system options based upon data or specifications provided by the user, the user is responsible for determining that such data and specifications are suitable and sufficient for all applications and reasonably foreseeable uses of the components or systems.

SALE CONDITIONS

The items described in this document are available for sale by Parker Hannifin Corporation, its subsidiaries or its authorized distributors. Any sale contract entered into by Parker will be governed by the provisions stated in Parker's standard terms and conditions of sale (copy available upon request).

Introduction	4 - 9
P31, P32, P33 Series	10 - 80
Global System	10 - 13
Particulate Filters	14 - 19
Coalescing Filters	20 - 25
Regulators	26 - 35
Proportional Regulators	36 - 39
Filter / Regulators	40 - 45
Lubricators	46 - 51
Combinations	52 - 55
Dump Valves / Soft Start Valves	56 - 61
Safety Exhaust Valves	62 - 65
Accessories	66 - 76
P3Y Series	77 - 98
P3Y System	77
Particulate Filters	78 - 79
Coalescing Filters	80 - 81
Regulators	82 - 85
Filter / Regulators	86 - 87
Lubricators	88 - 89
Combinations	90 - 91
Soft Start / Dump Valves	92 - 94
Accessories	94 - 95

Parker Global Air Preparation System

Global.
Modular.

Performance you need,
wherever you need it.

Full featured particulate and coalescing filters, regulators, filter/regulators, and lubricators are available with a wide range of standard options to meet air preparation needs.

The comprehensive Global Air Preparation System is available in three body sizes with either BSPP (EMEA) or NPT (US) to accommodate thread type requirements.

Individual units can easily be assembled into various combinations, utilizing patented modular lightweight body connectors.

Fully Modular Air Preparation System

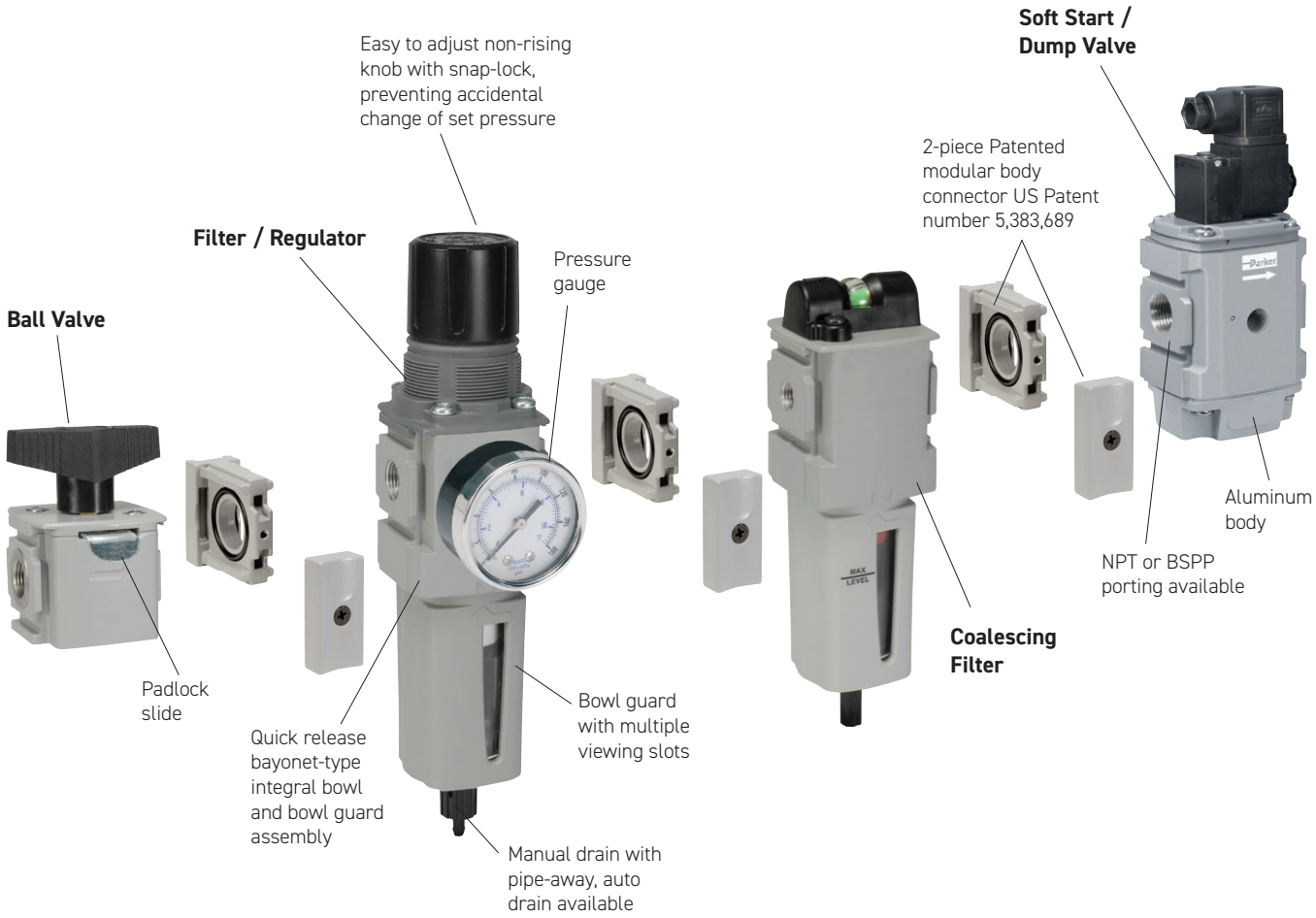

- Mixity beween sizes P32 and P33 by using same mountings.
- Extended air ports sizes by adding end port blocks or for converting from BSPP body threaded to NPT.

	P31	P32	P33
1/8"	n		
1/4"	**q**	**q**	n
3/8"		**q**	n
1/2"		**q**	**q**
3/4"		n	**q**

n With end blocks

q Body threaded

Global Comprehensive Offering

P31 Mini Series
1/4" ports
40mm body width

P32 Compact Series
1/4", 3/8" and 1/2"
60mm body width

P33 Standard Series
1/2" and 3/4"
73mm body width

Filters

- 5µ particulate, 1.0µ and 0.01µ coalescing, and adsorber available as standard
- Transparent or metal bowl with manual or auto float drains standard

Regulators

- Available as stand alone, common port and electronic proportional
- Both relieving and non-relieving versions available

Filter / Regulators

- Compact design for space savings
- Available with all the same standard options as the filters and regulators

Lubricators

- Proportional oil delivery over a wide range of air flows
- Fill under pressure

Combinations

- Compact design for space savings
- Easily assembled
- Many configurations available

Accessories

- Solenoid operated soft start, quick dump, and soft start/ quick dump valves
- Manifold blocks
- Ball style lockout / shutoff valve
- Repair kits, gauges, etc.

P3Y Comprehensive Offering

P3Y Series
3/4" and 1"
90mm body width

Filters

- 5µ particulate, 1.0µ and 0.01µ coalescing, and adsorber available as standard
- Polypropylene bowl with metal screw in bowl guard

Regulators

- Available as a stand alone high flow unit with a rolling diaphragm to extend life
- Optional key lock

Filter / Regulators

- Compact design for space savings
- Available with all the same standard options as the filters and regulators

Lubricators

- Proportional oil delivery over a wide range of air flows
- Fill under pressure

Combinations

- Compact design for space savings
- Easily assembled

Accessories

- Solenoid operated soft start, quick dump, and soft start/ quick dump valves
- Manifold blocks
- Ball style lockout / shutoff valve
- Repair kits, gauges, etc.

Complete Air Preparation

P31 Mini Series

40mm body width

1/4" Ported

Flows up to:	scfm	(dm^3/s, ANR)
Filter	25	(12)
Coalescer	7.5	(3.6)
Regulator	68	(32)
Filter/Regulator	74	(35)
Lubricator	52	(25)

Features:

- Space saving integral gauge
- Manifold style regulators available
- OSHA compliant shut-off valves
- Soft-Start & Quick Dump valves
- Electronic Proportional Regulator

P32 Compact Series

60mm body width

(1/4"), 3/8", & 1/2" Ported

Flows up to:	scfm	(dm^3/s, ANR)
Filter	82	(39)
Coalescer	36	(17)
Regulator	165	(78)
Filter/Regulator	164	(77)
Lubricator	90	(42)

Features:

- Manifold style regulators available
- OSHA Compliant shut-off valves
- Soft-Start & Quick Dump valves
- Electronic Proportional Regulator

P33 Standard Series

73mm body width

(1/2") & 3/4" Ported

Flows up to:	scfm	(dm^3/s, ANR)
Filter	102	(48)
Coalescer	42	(20)
Regulator	233	(110)
Filter/Regulator	235	(109)
Lubricator	150	(71)

Features:

- OSHA Compliant shut-off valves
- Soft-Start & Quick Dump valves (Utilizes P32 size only)
- Electronic proportional regulator (Utilizes P32 size only)

P3Y Large Series

90mm body width

3/4" and 1" Ported

Flows up to:	scfm	(dm^3/s, ANR)
Filter	170	(80)
Coalescer	307	(150)
Regulator	550	(260)
Filter/Regulator	465	(220)
Lubricator	390	(184)

Features:

- OSHA Compliant shut-off valves
- Soft-Start & Quick Dump valves
- Electronic Proportional Regulator

Complete FRL System

Safety Exhaust Valves

- External monitoring provides a cost and space saving advantage
- Solid state pressure sensors provide accurate, fast fault detection
- Quick visual LED indicators on the front of the valve
- Safety exhaust outlet is no-maintenance and non-clog by design
- Suitable for stand alone use or modular mounting to P32 or P33 FRL assembly

(optional soft start)

Optional Tamperproof Kits

- One facilitates the permanent tamperproofing of the Regulator and Filter/Regulator units
- Hinged black part clamps over control knob and is locked in place after sliding yellow cover over it
- Other allows for removable lockout/tagout tamperproofing
  - Four pad lock location holes tagout
  - Hinged locking clamp secures over existing knob via yellow cover which is slid over into place

Common Port Manifold Regulators

- Multiple output pressures (P2, P3, P4, etc.) with common inlet (P1)
- Available in two sizes P31 and P32
- Balanced valve design for accurate pressure regulation
- Outlet pressure ports in front and rear of unit
- Multiple spring ranges available

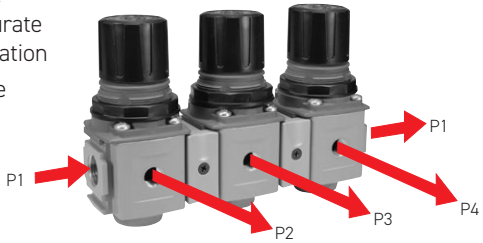

Additional Options

(Consult factory for availability)

- T-Handle

- Preset and Tamperproof

- Preset
- Pressure Limiter

Electronic Proportional Regulators

- Electro-Pneumatic regulator
- Integrated systems control
- Accurate output pressure
- Micro parameter settings
- Selectable I/O parameters
- Quick, full flow exhaust
- LED display indicates output pressure
- No air consumption in steady state
- Multiple mounting options
- Protection to IP65

P31P Mini Series

P32P Compact Series

Together we can power your application with clean, dry air

Fast cycle times, high product quality, and low downtime all require a clean, dry pneumatic system to function properly. Parker has what it takes to make sure pneumatic systems perform at their best.

Clean, dry pneumatic systems with Parker Global Air Preparation

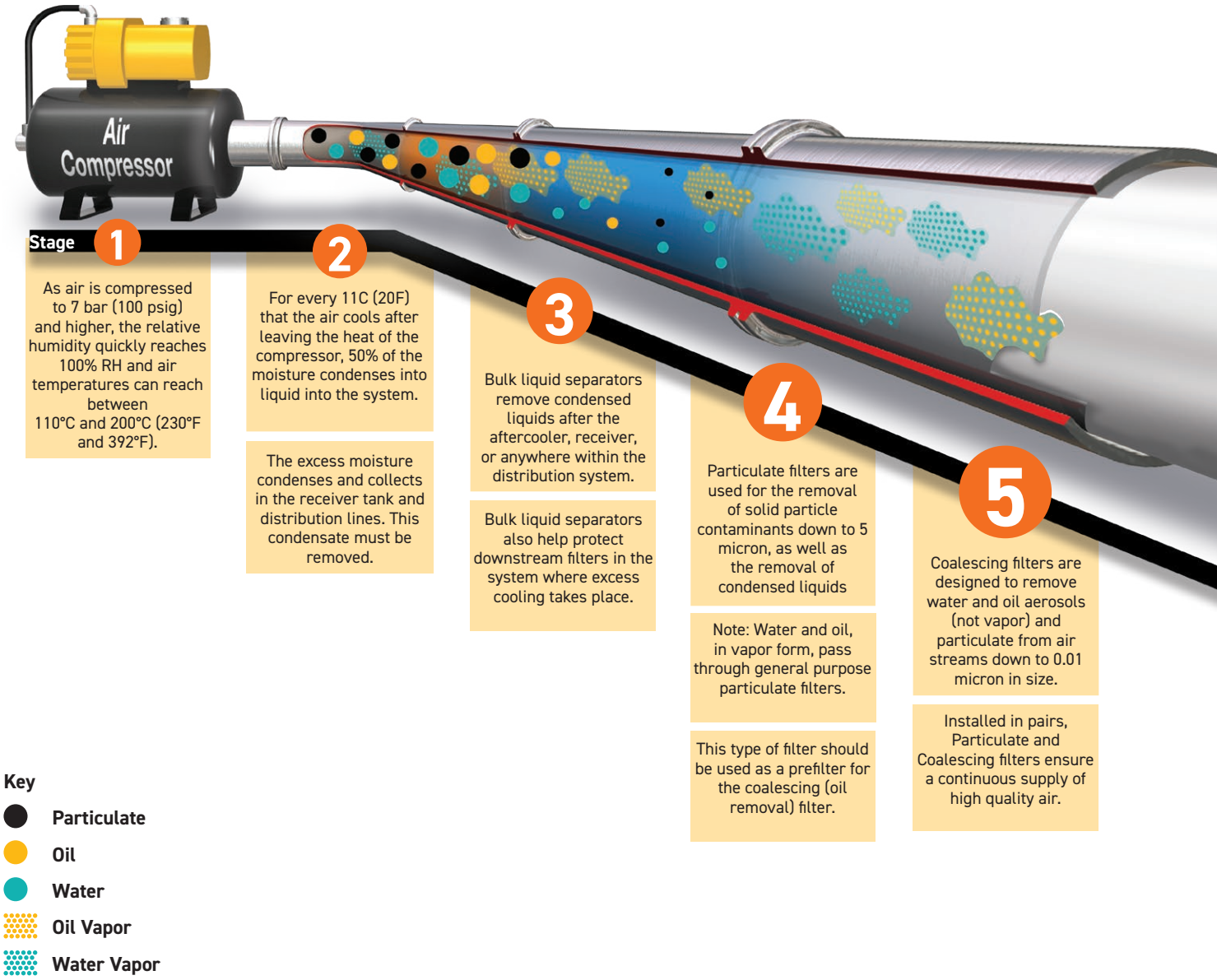

Stages	1 2	3	4	5	6	7
Function	**Air Compressor**	**Bulk Liquid Removal**	**Particulate Filtration**	**Coalescing Filtration**	**Air Dryers**	**Oil Vapour Filtration**
Application	All pneumatic systems	Basic pneumatic systems	Basic pneumatic systems	Systems requiring highest quality air.	Systems requiring air with reduced moisture content	Systems requiring highest quality air for critical applications
Description	Air leaving the compressor room at 93°C (200°F) releases 95% of its moisture into the piping system when it cools to 38°C (100°F)	Removes bulk liquid contamination and protects filters where excess cooling takes place in the distribution piping	Removes solid particulates down to 5 micron, and the separation of bulk contaminants.	Removes liquid aerosols and submicron particulates (not vapor) down to 0.01 micron.	Removes water vapor from air stream. Dew point reduced down to 4°C (40°F) (refrigeration) or -40°C (-40°F) (desiccant).	Removal of odors and trace vapors for critical applications.
Parker Global Air Preparation Solution	Customer supplied		P31/32/33/P3Y Particulate Filter	P31/32/33/P3Y Coalescing Filter		P31/32/33/P3Y Activated Carbon (Adsorber) Filter

Specifying air quality (purity) in accordance with ISO8573-1:2010, the international standard for compressed air quality

ISO8573-1 is the primary document used from the ISO8573 series as it is this document which specifies the amount of contamination allowed in each cubic metre of compressed air.

ISO8573-1 lists the main contaminants as Solid Particulate, Water and Oil. The purity levels for each contaminant are shown separately in tabular form, however for ease of use, this document combines all three contaminants into one easy to use table.

ISO8573-1:2010 CLASS	Solid Particulate				Water		Oil
	Maximum number of particles per m^3			Mass Concentration mg/m^3	Vapour Pressure Dewpoint	Liquid g/m^3	Total Oil (aerosol liquid and vapour) mg/m^3
	0,1 - 0,5 micron	0,5 - 1 micron	1 - 5 micron				
0	As specified by the equipment user or supplier and more stringent than Class 1						
1	≤ 20 000	≤ 400	≤ 10	-	≤ -70 °C	-	0,01
2	≤ 400 000	≤ 6 000	≤ 100	-	≤ -40 °C	-	0,1
3	-	≤ 90 000	≤ 1 000	-	≤ -20 °C	-	1
4	-	-	≤ 10 000	-	≤ +3 °C	-	5
5	-	-	≤ 100 000	-	≤ +7 °C	-	-
6	-	-	-	≤ 5	≤ +10 °C	-	-
7	-	-	-	5 - 10	-	≤ 0,5	-
8	-	-	-	-	-	0,5 - 5	-
9	-	-	-	-	-	5 - 10	-
X	-	-	-	> 10	-	> 10	> 10

Specifying air purity in accordance with ISO8573-1:2010
When specifying the purity of air required, the standard must always be referenced, followed by the purity class selected for each contaminant (a different purity class can be selected for each contamination if required).
An example of how to write an air quality specification is shown below:

ISO 8573-1:2010 Class 1.2.1
ISO 8573-1:2010 refers to the standard document and its revision, the three digits refer to the purity classifications selected for solid particulate, water and total oil. Selecting an air purity class of 1.2.1 would specify the following air quality when operating at the standard's reference conditions:

Class 1 - Particulate
In each cubic metre of compressed air, the particulate count should not exceed 20,000 particles in the 0.1 - 0.5 micron size range, 400 particles in the 0.5 - 1 micron size range and 10 particles in the 1 - 5 micron size range.

Class 2 - Water
A pressure dewpoint (PDP) of -40°C or better is required and no liquid water is allowed.

Class 1 - Oil
In each cubic metre of compressed air, not more than 0.01mg of oil is allowed. This is a total level for liquid oil, oil aerosol and oil vapour.

ISO8573-1:2010 Class zero
- **Class 0 does not mean zero contamination.**
- **Class 0 requires the user and the equipment manufacturer to agree contamination levels as part of a written specification.**
- **The agreed contamination levels for a Class 0 specification should be within the measurement capabilities of the test equipment and test methods shown in ISO8573 Pt 2 to Pt 9.**
- **The agreed Class 0 specification must be written on all documentation to be in accordance with the standard.**
- **Stating Class 0 without the agreed specification is meaningless and not in accordance with the standard.**
- **A number of compressor manufacturers claim that the delivered air from their oil-free compressors is in compliance with Class 0.**
- **If the compressor was tested in clean room conditions, the contamination detected at the outlet will be minimal. Should the same compressor now be installed in typical urban environment, the level of contamination will be dependent upon what is drawn into the compressor intake, rendering the Class 0 claim invalid.**
- **A compressor delivering air to Class 0 will still require purification equipment in both the compressor room and at the point of use for the Class 0 purity to be maintained at the application.**
- **Air for critical applications such as breathing, medical, food, etc typically only requires air quality to Class 2.2.1 or Class 2.1.1.**
- **Purification of air to meet a Class 0 specification is only cost effective if carried out at the point of use.**

Application Guide

FRL to Valve: The chart below contains recommendations for the correct selection of Global Air Preparation units to suit the number and size of valves in a typical application.

	P31 Mini Series					P32 Compact Series						P33 Standard Series				
	Number of valves that would actuate at once															
	1	2	3	4	5	6	7	8	9	10	11	12	13	14	15	16
Moduflex 1																
Isys Micro																
HB / Viking Xtreme																
Moduflex 2																
HA / Global ISO																
							See Large P3Y Series									

Actuator to FRL: The chart below contains recommendations for the correct selection of Global Air Preparation units suitable for each cylinder size. If you have a tube length over 2 m, choose one tube size larger than the chart. The table is based on a Maximum cylinder speed of 0.5m/s

Cyl Ø mm Cyl Ø inches		Cylinder bore size													
		5 (5/16)	10 (7/16)	16 (9/16)	20 (3/4)	25 (1)	28 (1-1/8)	32 (1-1/4)	40 (1-1/2)	45 (1-3/4)	50 (2)	63 (2-1/2)	75 (3)	80 (3-1/4)	100 (4)
Tube Ø mm Tube Ø inches		Tube diameter external													
		4 (5/32)	4 (5/32)	4 (5/32)	6 (1/4)	6 (1/4)	6 (1/4)	6 (1/4)	8 (5/16)	8 (5/16)	8 (5/16)	10 (3/8)	10 (3/8)	12 (1/2)	12 (1/2)
Number of cylinders actuating at once	1														
	2														
	3														
	4														
	5														
	6														
	7														
	8														
	9														
	10														
		P31 Mini Series					P32 Compact Series			P33 Standard Series			Large P3Y Series		

Note: Data listed above is simply a guideline for a typical application only. Proper sizing and correct flow requirements must be taken into account.

P31 Particulate Filter – Mini

- Integral 1/4" ports (NPT & BSPP)
- High efficiency 5 micron element as standard
- Excellent water removal efficiency
- Robust but lightweight aluminum construction
- One hand operation for easy element cartridge removal
- Positive bayonet latch to ensure correct & safe fitting

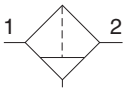

Manual drain

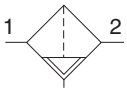

Pulse drain

Port Size	Description ‡	Part Number
1/4"	Poly Bowl, Manual Drain	**P31FB12EGMN**
1/4"	Poly Bowl, Pulse Drain	**P31FB12EGBN**
1/4"	Metal Bowl, Manual Drain	**P31FB12EMMN**
1/4"	Metal Bowl, Pulse Drain	**P31FB12EMBN**

‡ For polycarbonate bowl, see caution in Engineering Section A.

Operating Information

Supply pressure (max):	
Plastic bowl	150 psig (10 bar)
Metal bowl	250 psig (17 bar)
Operating temperature:	
Plastic bowl	14°F to 125°F (-10°C to 52°C)
Metal bowl	14°F to 150°F (-10°C to 65.5°C)
Standard filtration:	5 micron
Flow capacity*:	25 scfm (12 dm^3/s, ANR)
Useful retention†:	0.4 US oz. (12 cm^3)
Weight:	0.24 lb (0.11 kg)

* Inlet pressure 91.3 psig (6.3 bar). Pressure drop 4.9 psig (0.34 bar).
† Useful retention refers to volume below the quiet zone baffle.

Ordering Information:

P31FB 1 2 E G M N

Basic Series

Global Modular Mini Particulate Filter	P31FB

Thread Type

BSPP	1
NPT	9

Port Size

1/4	2

Element

5µ Element	E

Bowl Type

G	Poly Bowl with Bowl Guard
M	Metal Bowl without Sight Gauge

Drain Type

M	Manual Drain
B	Pulse Drain

Mounting

N	No Bracket

Most Popular

Material Specifications

Body	Aluminum
Body cap	ABS
Plastic bowl	Polycarbonate
Metal bowl	Aluminum
Bowl guard	Nylon
Element retainer	Acetal
Baffle	Acetal
Filter element	Sintered polyethylene
Seals	Nitrile

Repair and Service Kits

Plastic bowl / bowl guard, manual drain	**P31KB00BGM**
Metal bowl / w/o sight gauge, manual drain	**P31KB00BMM**
Plastic bowl / bowl guard, pulse drain	**P31KB00BGB**
Metal bowl / w/o sight gauge, pulse drain	**P31KB00BMB**
5µ particle filter element	**P31KA00ESE**
C-bracket (fits to body)	**P31KA00MW**
T-bracket with body connector	**P31KA00MT**
Body connector	**P31KA00CB**

Flow Charts

P31FB 1/4" Filter

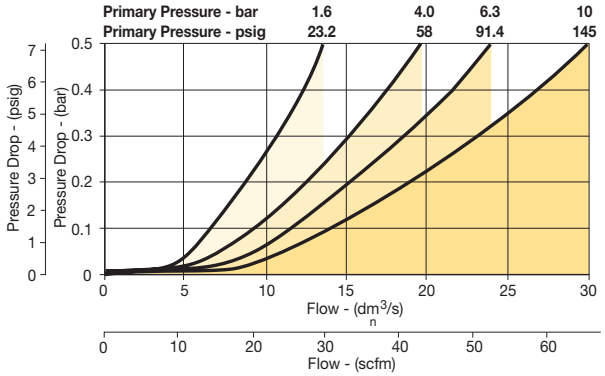

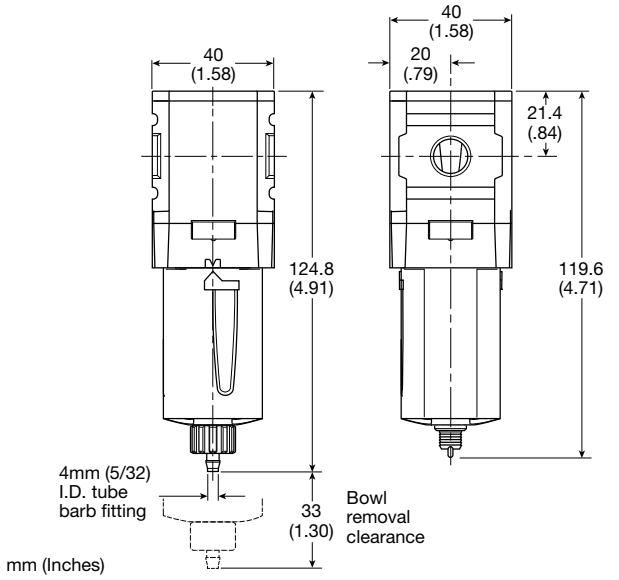

Manual Drain **Pulse Drain**

Most Popular

P32 Particulate Filter – Compact

- Integral 1/4", 3/8" or 1/2" ports (NPT & BSPP)
- High efficiency 5 micron element as standard
- Excellent water removal efficiency
- Robust but lightweight aluminum construction
- Positive bayonet latch to ensure correct & safe fitting

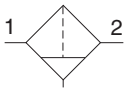

Manual drain

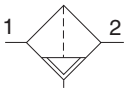

Auto drain

Port Size	Description ‡	Part Number
1/4"	Poly Bowl, Manual Drain	**P32FB12EGMN**
1/4"	Poly Bowl, Auto Drain	**P32FB12EGAN**
1/4"	Metal Bowl, Manual Drain	**P32FB12ESMN**
1/4"	Metal Bowl, Auto Drain	**P32FB12ESAN**
3/8"	Poly Bowl, Manual Drain	**P32FB13EGMN**
3/8"	Poly Bowl, Auto Drain	**P32FB13EGAN**
3/8"	Metal Bowl, Manual Drain	**P32FB13ESMN**
3/8"	Metal Bowl, Auto Drain	**P32FB13ESAN**
1/2"	Poly Bowl, Manual Drain	**P32FB14EGMN**
1/2"	Poly Bowl, Auto Drain	**P32FB14EGAN**
1/2"	Metal Bowl, Manual Drain	**P32FB14ESMN**
1/2"	Metal Bowl, Auto Drain	**P32FB14ESAN**

‡ For polycarbonate bowl, see caution in Engineering Section A.

Operating Information

Supply pressure (max):		
Plastic bowl		150 psig (10 bar)
Metal bowl		250 psig (17 bar)
Operating temperature:		
Plastic bowl		-13°F to 125°F (-25°C to 52°C)
Metal bowl		-13°F to 150°F (-25°C to 65.5°C)
Standard filtration:		5 micron
Flow capacity*:	1/4	50 scfm (24 dm^3/s, ANR)
	3/8	78 scfm (37 dm^3/s, ANR)
	1/2	82 scfm (39 dm^3/s, ANR)
Useful retention†:		1.7 US oz. (51 cm^3)
Weight:		0.62 lb (0.28 kg)

* Inlet pressure 91.3 psig (6.3 bar). Pressure drop 4.9 psig (0.34 bar).
† Useful retention refers to volume below the quiet zone baffle.

Ordering Information:

P32FB 1 4 E G M N

Basic Series

Global Modular Compact Particulate Filter	P32FB

Thread Type

BSPP	1
NPT	9

Port Size

1/4	2
3/8	3
1/2	4

Element

5µ Element	E

Bowl Type

G	Poly Bowl with Bowl Guard
M	Metal Bowl without Sight Gauge
S	Metal Bowl with Sight Gauge

Drain Type

M	Manual Drain
A	Auto Drain

Mounting

N	No Bracket

Most Popular

Material Specifications

Body	Aluminum
Body cap	ABS
Plastic bowl	Polycarbonate
Metal bowl	Aluminum
Bowl guard	Nylon
Deflector	Polypropylene
Element retainer / Baffle	Acetal
Filter element	Sintered polyethylene
Seals	Nitrile
Sight gauge	Nylon

Repair and Service Kits

Plastic bowl / bowl guard, manual drain	**P32KB00BGM**
Metal bowl / sight gauge, manual drain	**P32KB00BSM**
Auto drain	**P32KA00DA**
5µ particle filter element	**P32KA00ESE**
L-bracket (fits to body)	**P32KA00ML**
T-bracket (fits to body connector)	**P32KA00MB**
T-bracket with body connector	**P32KA00MT**
Body connector	**P32KA00CB**

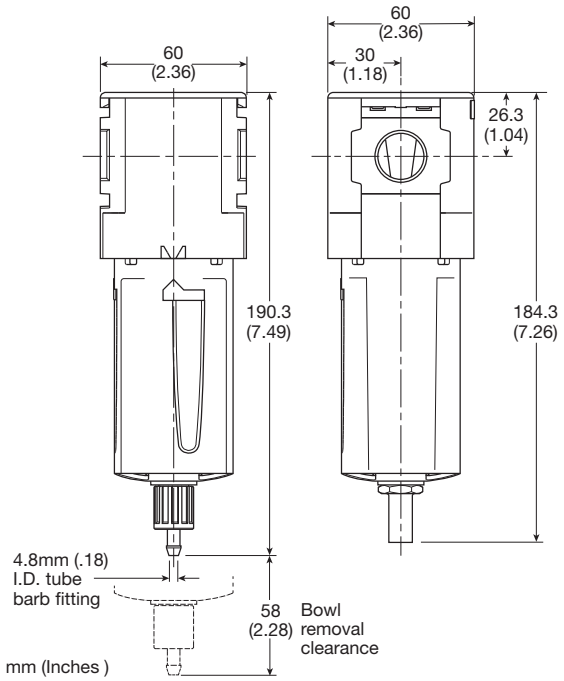

Manual Drain **Automatic Drain**

Flow Charts

P32FB 1/4" Filter

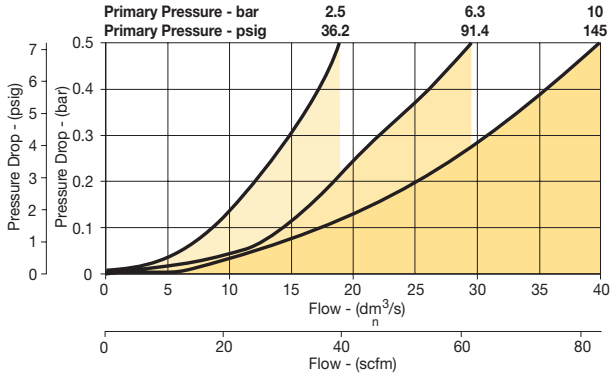

P32FB 3/8" Filter

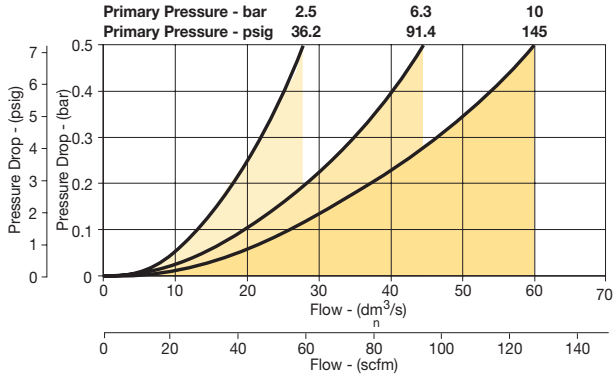

P32FB 1/2" Filter

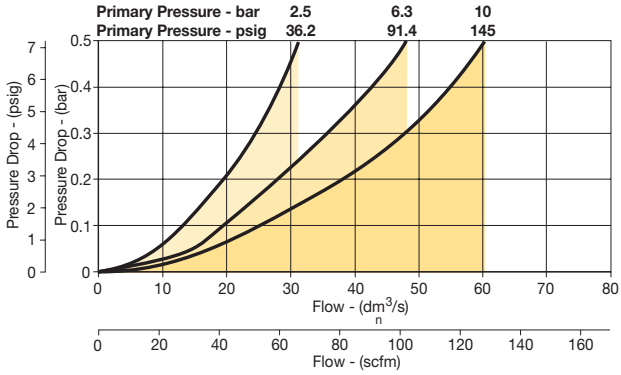

Most Popular

P33 Particulate Filter – Standard

- Integral 1/2" or 3/4" ports (NPT & BSPP)
- High efficiency 5 micron element as standard
- Excellent water removal efficiency
- Robust but lightweight aluminum construction
- Positive bayonet latch to ensure correct & safe fitting

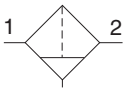

Manual drain

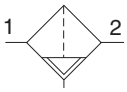

Auto drain

Port Size	Description ‡	Part Number
1/2"	Poly Bowl, Manual Drain	**P33FA14EGMN**
1/2"	Poly Bowl, Auto Drain	**P33FA14EGAN**
1/2"	Metal Bowl, Manual Drain	**P33FA14ESMN**
1/2"	Metal Bowl, Auto Drain	**P33FA14ESAN**
3/4"	Poly Bowl, Manual Drain	**P33FA16EGMN**
3/4"	Poly Bowl, Auto Drain	**P33FA16EGAN**
3/4"	Metal Bowl, Manual Drain	**P33FA16ESMN**
3/4"	Metal Bowl, Auto Drain	**P33FA16ESAN**

‡ For polycarbonate bowl, see caution in Engineering Section A.

Operating Information

Supply pressure (max):		
Plastic bowl		150 psig (10 bar)
Metal bowl		250 psig (17 bar)
Operating temperature:		
Plastic bowl		-13°F to 125°F (-25°C to 52°C)
Metal bowl		-13°F to 150°F (-25°C to 65.5°C)
Standard filtration:		5 micron
Flow capacity*:	1/2	85 scfm (40 dm^3/s, ANR)
	3/4	102 scfm (48 dm^3/s, ANR)
Useful retention†:		2.8 US oz. (85 cm^3)
Weight:		1.01 lb (0.46 kg)

* Inlet pressure 91.3 psig (6.3 bar). Pressure drop 4.9 psig (0.34 bar).
† Useful retention refers to volume below the quiet zone baffle.

Ordering Information:

P33FA 1 6 E G M N

Basic Series

Global Modular Standard Particulate Filter	P33FA

Thread Type

BSPP	1
NPT	9

Port Size

1/2	4
3/4	6

Element

5µ Element	E

Bowl Type

G	Poly Bowl with Bowl Guard
M	Metal Bowl without Sight Gauge
S	Metal Bowl with Sight Gauge

Drain Type

M	Manual Drain
A	Auto Drain

Mounting

N	No Bracket

Most Popular

Material Specifications

Body	Aluminum
Body cap	ABS
Plastic bowl	Polycarbonate
Metal bowl	Aluminum
Bowl guard	Nylon
Deflector	Polypropylene
Element retainer / Baffle	Acetal
Filter element	Sintered polyethylene
Seals	Nitrile
Sight gauge	Nylon

Repair and Service Kits

Plastic bowl / bowl guard, manual drain	**P33KA00BGM**
Metal bowl / sight gauge, manual drain	**P33KA00BSM**
Auto drain	**P32KA00DA**
5µ particle filter element	**P33KA00ESE**
L-bracket (fits to body)	**P33KA00ML**
T-bracket (fits to body connector)	**P32KA00MB**
T-bracket with body connector	**P32KA00MT**
Body connector	**P32KA00CB**

Flow Charts

P33FA 1/2" Filter

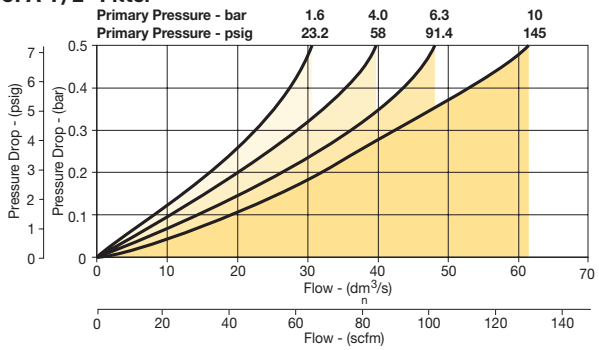

P33FA 3/4" Filter

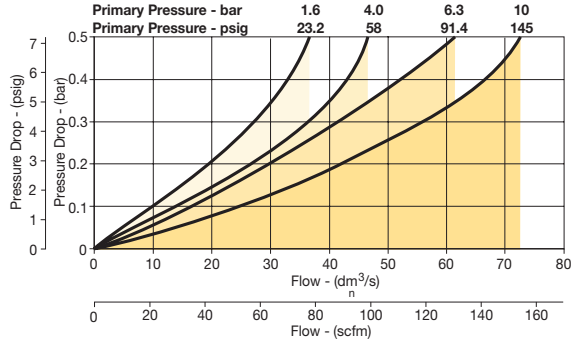

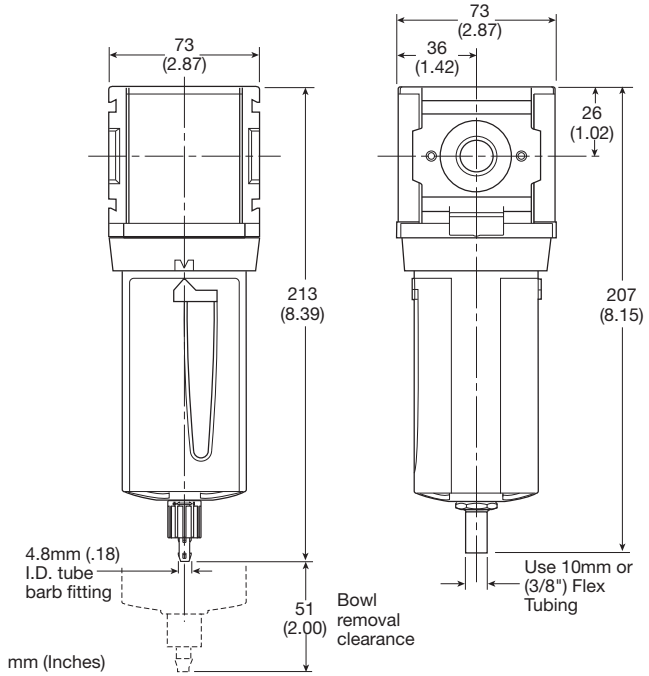

Manual Drain **Automatic Drain**

Most Popular

P31 Coalescing and Adsorber Filters – Mini

- Integral 1/4" ports (NPT & BSPP)
- Removes liquid aerosols and sub micron particles
- Oil free air for critical applications, such as air gauging, pneumatic instrumentation and control
- Positive bayonet latch to ensure correct and safe fitting
- Adsorbing activated carbon element removes oil vapors and most hydrocarbons

Note: To optimize the life of coalescing element, it is advisable to install a P31F pre-filter with a 5 micron element upstream of the coalescing filter.

To optimize the life of an Adsorber it is advisable to install a P31 Coalescing Filter upstream of the Adsorber. Adsorber element should be replaced approximately every 1000 hours of service.

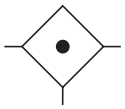

Port Size	Description ‡	Element	Part Number
1/4"	Poly Bowl, Manual Drain	0.01 micron	**P31FB12AGMN**
1/4'	Poly Bowl, Pulse Drain	0.01 micron	**P31FB12CGBN**
1/4"	Metal Bowl, Manual Drain	0.01 micron	**P31FB12AMBN**
1/4'	Metal Bowl, Pulse Drain	0.01 micron	**P31FB12CMBN**

‡ For polycarbonate bowl, see caution in Engineering Section A.

Operating Information

Supply pressure (max):	
Poly bowl	150 psig (10 bar)
Metal bowl w/ DPI	150 psig (10 bar)
Metal bowl w/o DPI	250 psig (17 bar)
Operating temperature:	
Plastic bowl	14°F to 125°F (-10°C to 52°C)
Metal bowl	14°F to 150°F (-10°C to 65.5°C)
Standard filtration:	1.0 and 0.01 micron
Adsorber	Max. oil carryover (ppm w/w) 0.003 @ 70°F (21°C)
Flow capacity*:	
1.0 micron coalescing	12 scfm (5.5 dm^3/s, ANR)
0.01 micron coalescing	7.5 scfm (3.6 dm^3/s, ANR)
Activated carbon adsorber	12.7 scfm (6 dm^3/s, ANR)
Useful retention†:	0.4 US oz. (12 cm^3)
Weight:	0.24 lb (0.11 kg)

* Inlet pressure 91.3 psig (6.3 bar). Pressure drop 3 psig (0.2 bar), saturated element.
† Useful retention refers to volume below the quiet zone baffle.

Ordering Information:

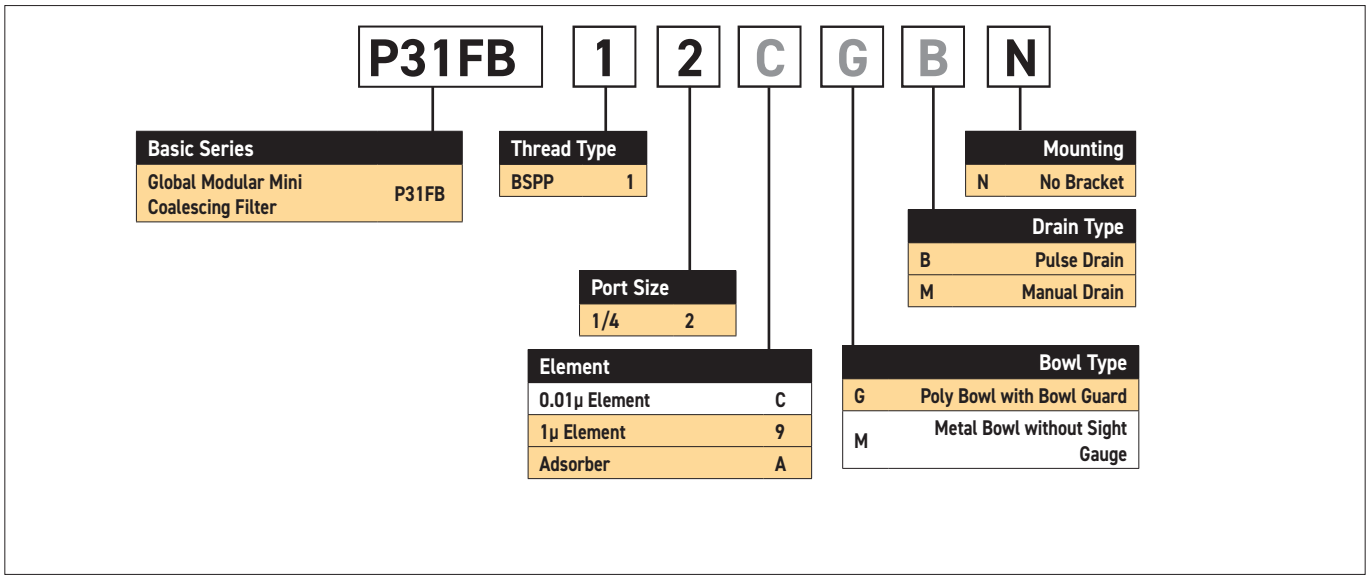

Most Popular

Material Specifications

Body	Aluminum
Body cap	ABS
Plastic bowl	Polycarbonate
Metal bowl	Aluminum
Filter element	Borosilicate cloth
Adsorber element	Activated carbon
Seals	Nitrile

Repair and Service Kits

Plastic bowl / bowl guard, manual drain	**P31KB00BGM**
Metal bowl / w/o sight gauge ,manual drain	**P31KB00BMM**
Plastic bowl / bowl guard, pulse drain	**P31KB00BGB**
Metal bowl / w/o sight gauge, pulse drain	**P31KB00BMB**
1µ coalescing filter element	**P31KA00ES9**
0.01µ coalescing filter element	**P31KA00ESC**
Activated carbon adsorber filter element	**P31KA00ESA**
C-bracket (fits to body)	**P31KA00MW**
T-bracket with body connector	**P31KA00MT**
Body connector	**P31KA00CB**
Differential pressure indicator (replacement)	**P31KB00RQ**

Flow Charts

P31FB - 1.0 micron flow

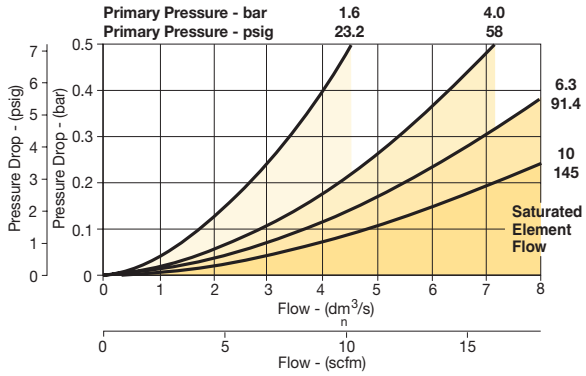

P31FB - 0.01 micron flow

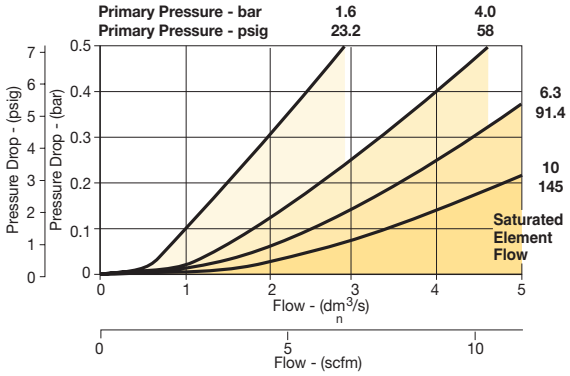

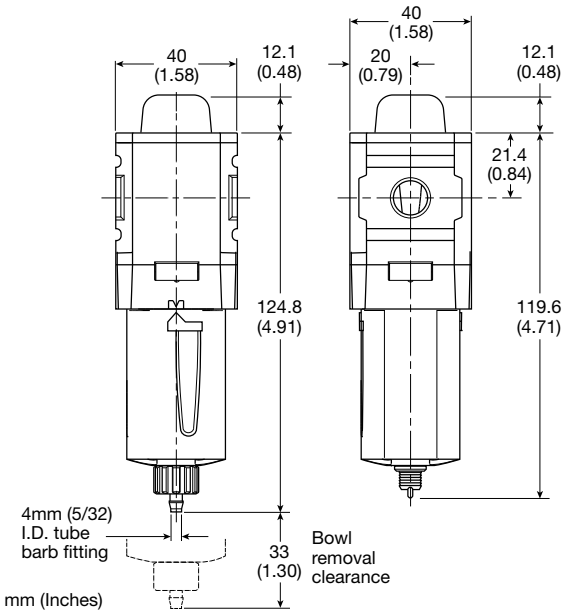

Manual Drain **Pulse Drain**

Most Popular

P32 Coalescing and Adsorber Filters – Compact

- Integral 1/4", 3/8" or 1/2" ports (NPT & BSPP)
- Removes liquid aerosols and sub micron particles
- Oil free air for critical applications, such as air gauging, pneumatic instrumentation and control
- Differential Pressure Indicator (DPI) standard on Coalescing Filters
- Positive bayonet latch to ensure correct & safe fitting
- Adsorbing activated carbon element removes oil vapors and most hydrocarbons

Note: To optimize the life of coalescing element, it is advisable to install a P32F pre-filter with a 5 micron element upstream of the coalescing filter.
To optimize the life of an Adsorber it is advisable to install a P32 Coalescing Filter upstream of the Adsorber. Adsorber element should be replaced approximately every 1000 hours of service.

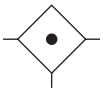

Port Size	Description ‡	Element	Part Number
1/4"	Poly Bowl, Manual Drain	0.01 micron	**P32FB12DGAN**
1/4"	Poly Bowl, Auto Drain	0.01 micron	**P32FB12DGAN**
1/4"	Metal Bowl, Manual Drain	0.01 micron	**P32FB12DSAN**
1/4"	Metal Bowl, Auto Drain	0.01 micron	**P32FB12DSAN**
3/8"	Poly Bowl, Manual Drain	0.01 micron	**P32FB13DGAN**
3/8"	Poly Bowl, Auto Drain	0.01 micron	**P32FB13DGAN**
3/8"	Metal Bowl, Manual Drain	0.01 micron	**P32FB13DSAN**
3/8'	Metal Bowl, Auto Drain	0.01 micron	**P32FB13DSAN**
1/2"	Poly Bowl, Manual Drain	0.01 micron	**P32FB14DGAN**
1/2"	Poly Bowl, Auto Drain	0.01 micron	**P32FB14DGAN**
1/2"	Metal Bowl, Manual Drain	0.01 micron	**P32FB14DSAN**
1/2"	Metal Bowl, Auto Drain	0.01 micron	**P32FB14DSAN**

‡ For polycarbonate bowl, see caution in Engineering Section A.

Operating Information

Supply pressure (max):		
Poly bowl	150 psig (10 bar)	
Metal bowl w/ DPI	150 psig (10 bar)	
Metal bowl w/o DPI	250 psig (17 bar)	
Operating temperature:		
Plastic bowl	-13°F to 125°F (-25°C to 52°C)	
Metal bowl	-13°F to 150°F (-25°C to 65.5°C)	
Standard filtration:	1.0 and 0.01 micron	
Adsorber	Max. oil carryover (ppm w/w) 0.003 @ 70°F (21°C)	
Flow capacity*:		
1.0 micron coalescing	53 scfm (25 dm^3/s, ANR)	0.01
micron coalescing	36 scfm (17 dm^3/s, ANR)	
Activated carbon adsorber	85 scfm (40 dm^3/s, ANR)	
Useful retention†:	1.7 US oz. (51 cm^3)	
Weight:	0.71 lb (0.32 kg)	

* Inlet pressure 91.3 psig (6.3 bar). Pressure drop 3 psig (0.2 bar), saturated element.
† Useful retention refers to volume below the quiet zone baffle.

Ordering Information:

P32FB 1 4 D G A N

Basic Series

Global Modular Compact Coalescing Filter	P32FB

Thread Type

BSPP	1
NPT	9

Port Size

1/4	2
3/8	3
1/2	4

Element

0.01µ Element	C
0.01µ Element with DPI	D
1µ Element	9
1µ Element with DPI	Q
Adsorber	A

Bowl Type

G	Poly Bowl with Bowl Guard
M	Metal Bowl without Sight Gauge
S	Metal Bowl with Sight Gauge

Drain Type

M	Manual Drain
A	Auto Drain

Mounting

N	No Bracket

Most Popular

Material Specifications

Body	Aluminum
Body cap	ABS
Plastic bowl	Polycarbonate
Metal bowl	Aluminum
Filter element	Borosilicate cloth
Adsorber	Activated carbon
Seals	Nitrile
Sight gauge	Nylon

Repair and Service Kits

Plastic bowl / bowl guard, manual drain	**P32KB00BGM**
Metal bowl / sight gauge, manual drain	**P32KB00BSM**
Auto drain	**P32KA00DA**
1µ coalescing filter element	**P32KA00ES9**
0.01µ coalescing filter element	**P32KA00ESC**
Activated carbon adsorber filter element	**P32KA00ESA**
L-bracket (fits to body)	**P32KA00ML**
T-bracket (fits to body connector)	**P32KA00MB**
T-bracket with body connector	**P32KA00MT**
Body connector	**P32KA00CB**
Differential pressure indicator (replacement)	**P32KA00RQ**

Flow Charts

P32FB - 1.0 micron flow

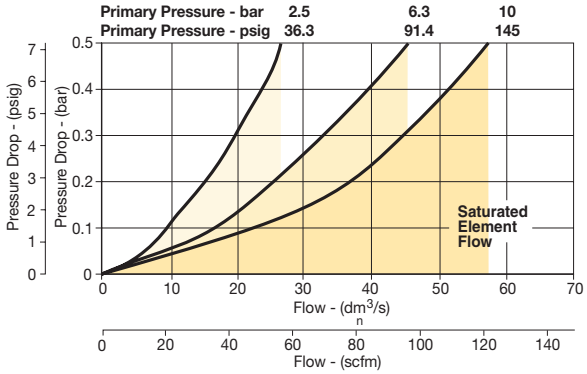

P32FB - 0.01 micron flow

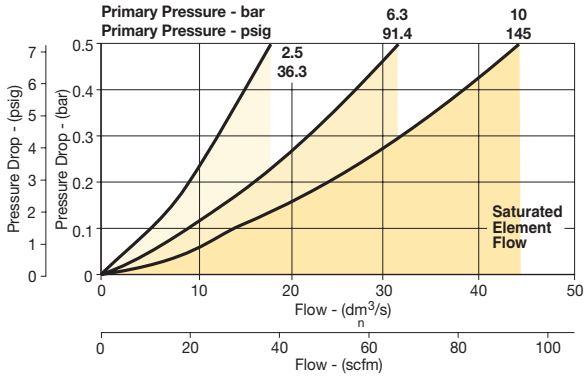

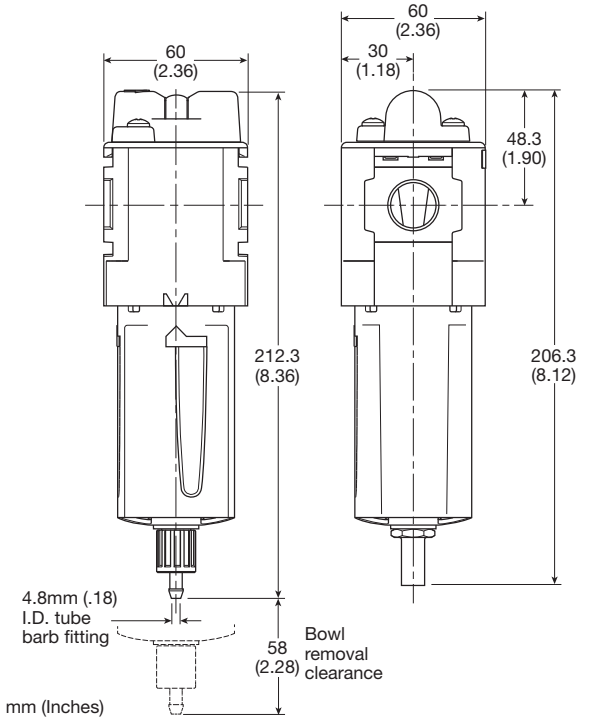

Manual Drain **Automatic Drain**

Most Popular

P33 Coalescing and Adsorber Filters – Standard

- Integral 1/2" or 3/4" ports (NPT & BSPP)
- Removes liquid aerosols and sub micron particles
- Oil free air for critical applications, such as air gauging, pneumatic instrumentation and control
- Differential Pressure Indicator (DPI) standard on Coalescing Filters
- Positive bayonet latch to ensure correct & safe fitting
- Adsorbing activated carbon element removes oil vapors and most hydrocarbons

Note: To optimize the life of coalescing element, it is advisable to install a P33F pre-filter with a 5 micron element upstream of the coalescing filter.

To optimize the life of an Adsorber it is advisable to install a P33 Coalescing Filter upstream of the Adsorber. Adsorber element should be replaced approximately every 1000 hours of service.

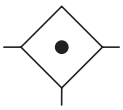

Port Size	Description ‡	Element	Part Number
1/2"	Poly Bowl, Manual Drain	0.01 micron	**P33FA14DGMN**
1/2"	Poly Bowl, Auto Drain	0.01 micron	**P33FA14DGAN**
1/2"	Metal Bowl, Manual Drain	0.01 micron	**P33FA14DSMN**
1/2"	Metal Bowl, Auto Drain	0.01 micron	**P33FA14DSAN**
3/4"	Poly Bowl, Manual Drain	0.01 micron	**P33FA16DGMN**
3/4"	Poly Bowl, Auto Drain	0.01 micron	**P33FA16DGAN**
3/4"	Metal Bowl, Manual Drain	0.01 micron	**P33FA16DSMN**
3/4"	Metal Bowl, Auto Drain	0.01 micron	**P33FA16DSAN**

‡ For polycarbonate bowl, see caution in Engineering Section A.

Operating Information

Supply pressure (max):	
Poly bowl	150 psig (10 bar)
Metal bowl w/ DPI	150 psig (10 bar)
Metal bowl w/o DPI	250 psig (17 bar)
Operating temperature:	
Plastic bowl	-13°F to 125°F (-25°C to 52°C)
Metal bowl	-13°F to 150°F (-25°C to 65.6°C)
Standard filtration:	1.0 and 0.01 micron
Adsorber	Max. oil carryover (ppm w/w) 0.003 @ 70°F (21°C)
Flow capacity*:	
1.0 micron coalescing	68 scfm (32 dm^3/s, ANR)
0.01 micron coalescing	42 scfm (20 dm^3/s, ANR)
Activated carbon adsorber	72 scfm (34 dm^3/s, ANR)
Useful retention†:	2.8 US oz. (85 cm^3)
Weight:	1.10 lb (0.50 kg)

* Inlet pressure 91.3 psig (6.3 bar). Pressure drop 3 psig (0.2 bar), saturated element.
† Useful retention refers to volume below the quiet zone baffle.

Ordering Information:

P33FA 1 6 D G A N

Basic Series

Global Modular Standard Coalescing Filter	P33FA

Thread Type

BSPP	1
NPT	9

Port Size

1/2	4
3/4	6

Element

0.01µ Element	C
0.01µ Element with DPI	D
1µ Element	9
1µ Element with DPI	Q
Adsorber	A

Bowl Type

G	Poly Bowl with Bowl Guard
M	Metal Bowl without Sight Gauge
S	Metal Bowl with Sight Gauge

Drain Type

M	Manual Drain
A	Auto Drain

Mounting

N	No Bracket

Most Popular

Material Specifications

Body	Aluminum
Body cap	ABS
Plastic bowl	Polycarbonate
Metal bowl	Aluminum
Filter element	Borosilicate cloth
Adsorber	Activated carbon
Seals	Nitrile
Sight gauge	Nylon

Repair and Service Kits

Plastic bowl / bowl guard, manual drain	**P33KA00BGM**
Metal bowl / sight gauge, manual drain	**P33KA00BSM**
Auto drain	**P32KA00DA**
1µ coalescing filter element	**P33KA00ES9**
0.01µ coalescing filter element	**P33KA00ESC**
Activated carbon adsorber filter element	**P33KA00ESA**
L-bracket (fits to body)	**P33KA00ML**
T-bracket (fits to body connector)	**P32KA00MB**
T-bracket with body connector	**P32KA00MT**
Body connector	**P32KA00CB**
Differential pressure indicator (replacement)	**P32KA00RQ**

Flow Charts

P33FA - 1.0 micron flow

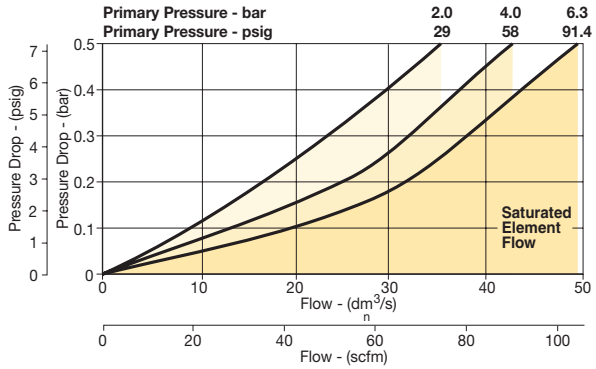

P33FA - 0.01 micron flow

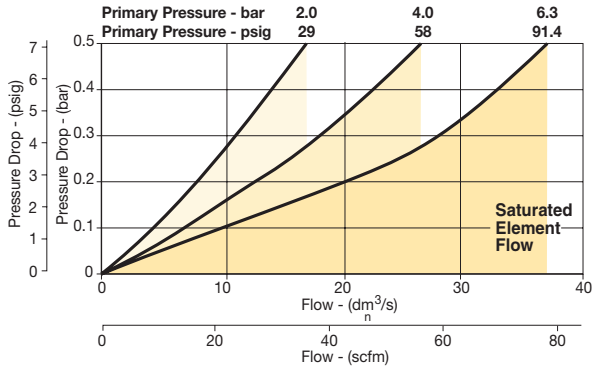

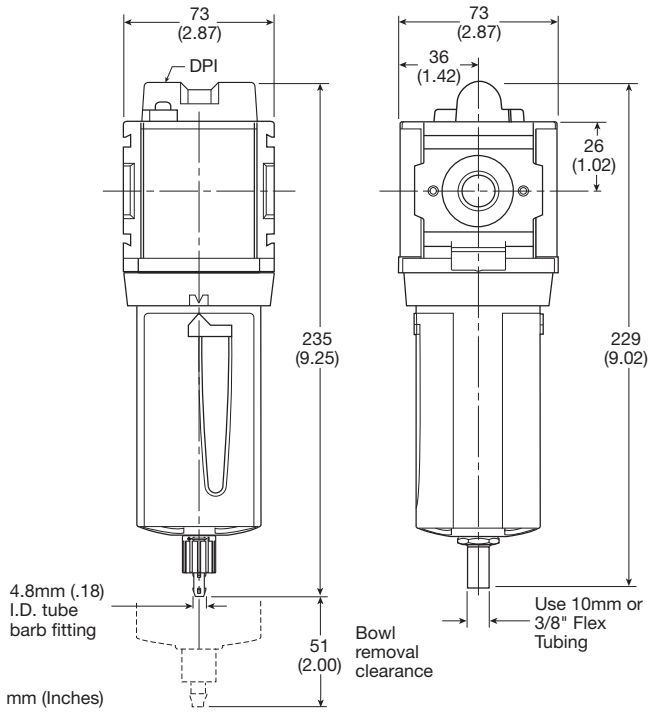

Manual Drain **Automatic Drain**

Most Popular

P31 Regulators – Mini

- Integral 1/4" ports (NPT & BSPP)
- Robust but lightweight aluminum construction
- Secondary pressure ranges
- Secondary aspiration plus balanced poppet provides quick response and accurate pressure regulation.
- Relieving & non-relieving types
- Non-rising knob

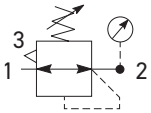

Self relieving regulator with gauge

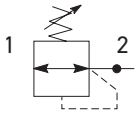

Non-relieving regulator

Port Size	Description (relieving)	Gauge	Part Number
1/4"	125 psig (8 bar)	Square	**P31RB12BNTP**

Operating Information

Flow capacity*:	1/4	73 scfm (32 dm³/s, ANR)
Operating temperature†:		-4°F to 150°F (-20°C to 65.5°C)
Supply pressure (max):		300 psig (20 bar)
Adjusting range pressure:		30 psig (0-2 bar) 60 psig (0-4 bar) 125 psig (0-8 bar) 232 psig (0-16 bar)
Weight:		0.37 lb (0.17 kg)

* Inlet pressure 145 psig (10 bar). Secondary pressure 91.3 psig (6.3 bar) and 14.5 psig (1 bar) pressure drop.
** Non-gauge option only.
† Units with square gauges: 5°F to 150°F (-15°C to 65.5°C)

Gauge supplied with every part. Gauge can be installed on the front or back of the regulator. If no gauge is installed, both seal screws must be installed.

Ordering Information:

P31RB 1 2 B N T P

Basic Series

Global Modular Mini Regulator	P31RB

Thread Type

BSPP	1
NPT	9

Port Size

1/4	2

Relief

Relieving	B
Non-Relieving	N
Reverse Flow-Relieving	R

Reverse flow for applications where pressure downstream must be exhausted during regular machine operation or system shutdown.

Adjustment

N	Non-rising knob

Adjustment Range

With Square Gauge	
psig (NPT Ports)	Bar (BSPP Ports)
1 = 30*	V = 2*
3 = 60	S = 4
5 = 125	T = 8
7 = 232	W = 16

* Regulator comes with gauge respective to the adjustment range selected.

Mounting

P	Plastic Panel Mount Nut

Most Popular

Material Specifications

Body	Aluminum
Adjustment knob	Acetal
Bonnet	PBT
Diaphragm assembly	Stainless Steel / Nitrile
Valve assembly	Acetal / Nitrile
Springs	Steel
Seals	Nitrile
Panel nut	Acetal

Flow Charts

P31RB 1/4" Regulator

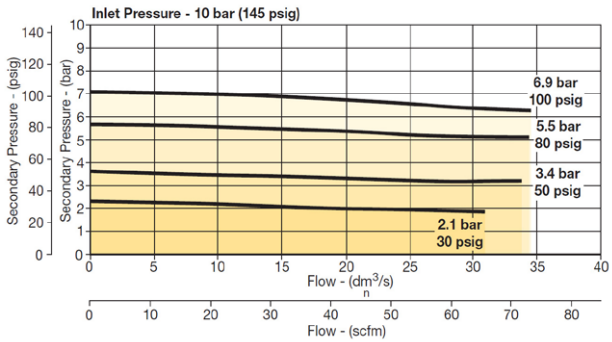

Repair and Service Kits

Panel mount nut - aluminum	**P31KA00MM**
Panel mount nut - plastic	**P31KA00MP**
Angle bracket (attaches via panel nut)	**P31KB00MR**
C-bracket (fits to body)	**P31KA00MW**
T-bracket with body connector	**P31KA00MT**
Body connector	**P31KA00CB**

⚠ WARNING

Product rupture can cause serious injury.
Do not connect regulator to bottled gas.
Do not exceed Maximum primary pressure rating.

CAUTION:

REGULATOR PRESSURE ADJUSTMENT – The working range of knob adjustment is designed to permit outlet pressures within their full range. Pressure adjustment beyond this range is also possible because the knob is not a limiting device. This is a common characteristic of most industrial regulators, and limiting devices may be obtained only by special design. For best performance, regulated pressure should always be set by increasing the pressure up to the desired setting.

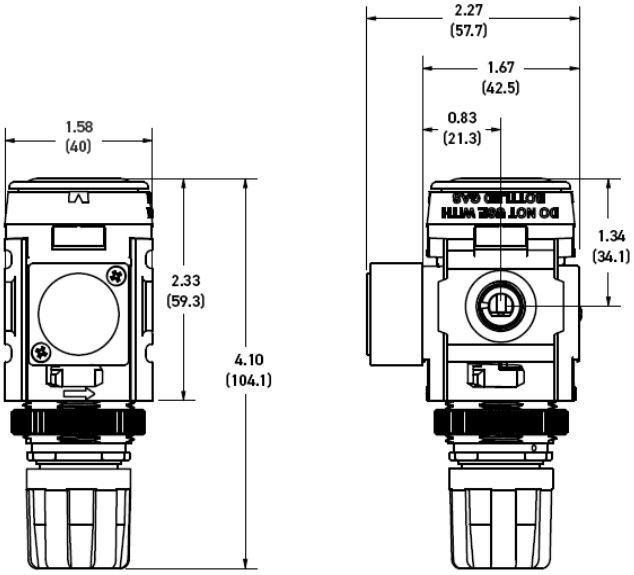

NOTE: 1.20 in. (30mm) hole required for panel nut mounting.

Square gauge supplied with every part. Gauge can be installed on the front or back of the regulator. If no gauge is installed, both seal screws must be installed.

Most Popular

P31 Common P1 Regulators – Mini

- Manifold style regulator with line pressure on both sides
- Pressure output is at front or rear
- Inlet port 1/4" (NPT & BSPP)
- Working port 1/8"
- Robust construction
- Secondary pressure ranges
- Secondary aspiration plus balanced poppet provides quick response and accurate pressure regulation
- Relieving & non-relieving types
- Non-rising knob

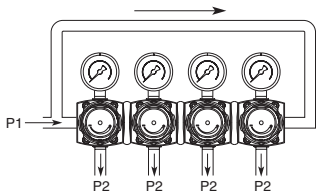

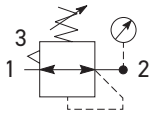

Self relieving regulator with gauge

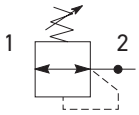

Non-relieving regulator

Port Size	Description (relieving)	Gauge	Part Number
1/4"	125 psig (8 bar)	Square	**P31HB12BNTP**

Operating Information

Flow capacity*: 1/4	64 scfm (20 dm^3/s, ANR)
Operating temperature:	-4°F to 150°F (-20°C to 65.5°C)
Supply pressure (max):	300 psig (20 bar)
Adjusting range pressure:	30 psig (0-2 bar) 60 psig (0-4 bar) 125 psig (0-8 bar) 232 psig (0-16 bar)
P1 port size (inlet/outlet)	1/4 NPT, BSPP
P2 regulated ports (2 ea.)	1/8 NPT, BSPP
Weight:	0.66 lb (0.30 kg)

* Inlet pressure 145 psig (10 bar). Secondary pressure 91.3 psig (6.3 bar) and 14.5 psig (1 bar) pressure drop.

Gauge supplied with every part. Gauge can be installed on the front or back of the regulator. If no gauge is installed, both seal screws must be installed.

Ordering Information:

P31HB 1 2 B N T P

Basic Series

Global Modular Mini Common Regulator	P31HB

Thread Type

BSPP	1
NPT	9

Port Size †

1/4	2

† Working port 1/8".

Relief

Relieving	B
Non-Relieving	N

Adjustment

N	Non-Rising Knob

Adjustment Range With Square Gauge

psig (NPT Ports)	Bar (BSPP Ports)
1 = 30*	V = 2*
3 = 60	S = 4
5 = 125	T = 8
7 = 232	W = 16

* Regulator comes with gauge respective to the adjustment range selected.

Mounting

P	Plastic Panel Mount Nut

Most Popular

Materials of Construction

Body	Aluminum
Adjustment knob	Acetal
Bonnet	Glass-filled PBT
Diaphragm assembly	Stainless Steel / Nitrile
Valve assembly	Acetal / Nitrile

Repair and Service Kits

Panel mount nut - aluminum	**P31KA00MM**
Panel mount nut - plastic	**P31KA00MP**
Angle bracket (attaches via panel nut)	**P31KB00MR**
T-bracket with body connector	**P31KA00MT**
Body connector	**P31KA00CB**

Flow Charts

P31HB 1/4" Common Regulator

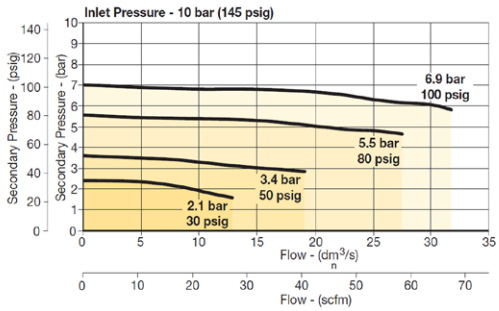

⚠ WARNING

Product rupture can cause serious injury.
Do not connect regulator to bottled gas.
Do not exceed Maximum primary pressure rating.

CAUTION:

REGULATOR PRESSURE ADJUSTMENT – The working range of knob adjustment is designed to permit outlet pressures within their full range. Pressure adjustment beyond this range is also possible because the knob is not a limiting device. This is a common characteristic of most industrial regulators, and limiting devices may be obtained only by special design. For best performance, regulated pressure should always be set by increasing the pressure up to the desired setting.

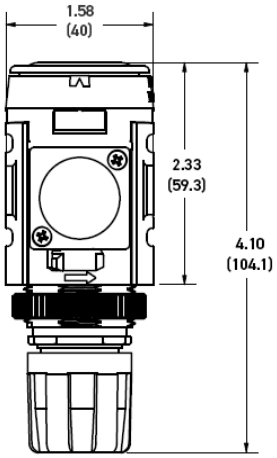

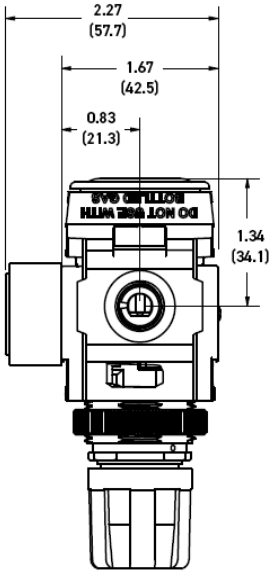

NOTE: 1.20 in. (30mm) hole required for panel nut mounting.

Square gauge supplied with every part. Gauge can be installed on the front or back of the regulator. If no gauge is installed, both seal screws must be installed.

Most Popular

P32 Regulators – Compact

- Integral 1/4", 3/8" or 1/2" ports (NPT & BSPP)
- Robust but lightweight aluminum construction
- Secondary pressure ranges
- Secondary aspiration plus balanced poppet provides quick response and accurate pressure regulation
- Relieving & non-relieving types
- Regulator will reverse flow as standard
- Non-rising knob
- Available T-handle

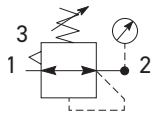

Self relieving regulator with gauge

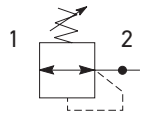

Non-relieving regulator

Port Size	Description (relieving)	Gauge	Part Number
1/4"	125 psig (8 bar)	None	**P32RB12BNGP**
3/8"	125 psig (8 bar)	None	**P32RB13BNGP**
1/2"	125 psig (8 bar)	None	**P32RB14BNGP**

Operating Information

Flow capacity*:	
1/4	148 scfm (70 dm³/s, ANR)
3/8, 1/2	165 scfm (78 dm³/s, ANR)
Operating temperature:	-13°F to 150°F (-25°C to 65.5°C)
Supply pressure (max):	300 psig (20 bar)
Adjusting range pressure:	30 psig (0-2 bar) 60 psig (0-4 bar) 125 psig (0-8 bar) 250 psig (0-17 bar)
Gauge port (2 each)	1/4 NPT, BSPP, BSPT
Weight:	0.90 lb (0.41 kg)

* Inlet pressure 145 psig (10 bar). Secondary pressure 91.3 psig (6.3 bar) and 14.5 psig (1 bar) pressure drop.

Ordering Information:

P32RB 1 4 B N G P

Basic Series

Global Modular Compact Regulator	P32RB

Thread Type

BSPP	1
NPT	9

Port Size

1/4	2
3/8	3
1/2	4

Relief

Relieving	B
Non-Relieving	N

Adjustment

N	Non-Rising Knob
T	T-Handle

Adjustment Range

	With Round Gauge
Z	30 psig; 2 bar; 0.2 MPa
M	60 psig; 4 bar; 0.4 MPa
G	125 psig; 8 bar; 0.8 MPa
J	250 psig; 17 bar; 1.7 MPa
	Without Gauge
Y	30 psig; 2 bar; 0.2 MPa
L	60 psig; 4 bar; 0.4 MPa
N	125 psig; 8 bar; 0.8 MPa
H	250 psig; 17 bar; 1.7 MPa

* Regulator comes with gauge respective to the adjustment range selected.

Mounting

P	Plastic Panel Mount Nut

Most Popular

Material Specifications

Body	Aluminum
Adjustment knob	Acetal
Bonnet	Glass-filled nylon
Diaphragm assembly	Nitrile / Zinc
Valve assembly	Brass / Nitrile
Springs	Steel, stainless steel
Seals	Nitrile
Panel nut	Acetal

Repair and Service Kits

Panel mount nut - aluminum	**P32KA00MM**
Panel mount nut - plastic	**P32KA00MP**
Angle bracket (attaches via panel nut)	**P32KB00MR**
T-bracket with body connector	**P32KA00MT**
T-bracket	**P32KA00MB**
Body connector	**P32KA00CB**

⚠ WARNING

Product rupture can cause serious injury.
Do not connect regulator to bottled gas.
Do not exceed Maximum primary pressure rating.

CAUTION:

REGULATOR PRESSURE ADJUSTMENT – The working range of knob adjustment is designed to permit outlet pressures within their full range. Pressure adjustment beyond this range is also possible because the knob is not a limiting device. This is a common characteristic of most industrial regulators, and limiting devices may be obtained only by special design. For best performance, regulated pressure should always be set by increasing the pressure up to the desired setting.

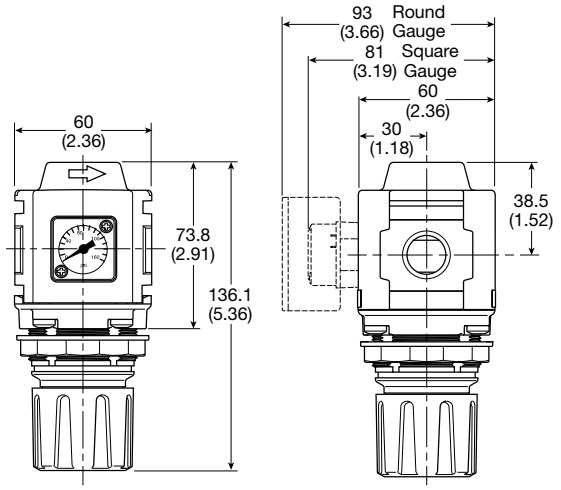

mm (Inches)

NOTE: 1.90 in. (48mm) hole required for panel nut mounting.

Flow Charts

P32RB 1/4" Regulator

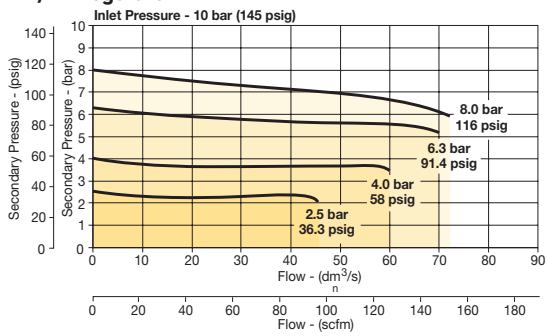

P32RB 3/8" Regulator

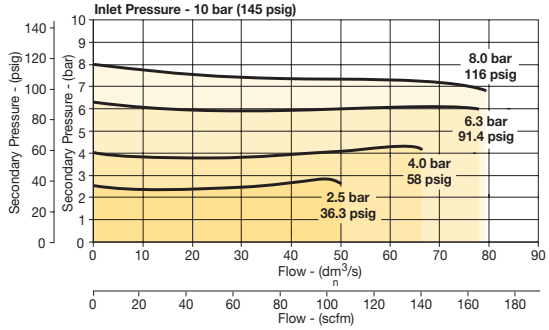

P32RB 1/2" Regulator

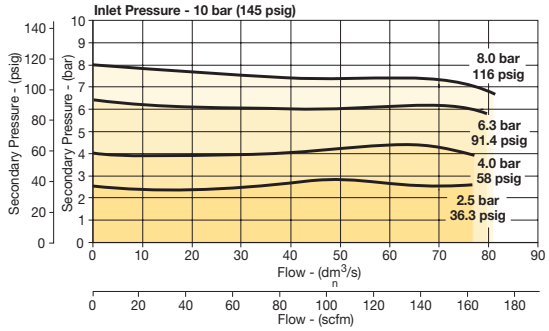

Gauges

50mm (2") round 1/4" center back mount	0-60 psig / 0-4 bar	**P6G-ERB2040**
	0-160 psig / 0-10 bar	**P6G-ERB2110**
	0-300 psig / 0-20 bar	**P6G-ERB2200**

For best performance, regulated pressure should always be set by increasing the pressure up to the desired setting.

Most Popular

P32 Common - P1 Regulator – Compact

- Manifold style regulator with line pressure on both sides.
- Pressure output is at front or rear.
- Inlet ports 1/4", 3/8" or 1/2" (NPT & BSPP)
- Working port 1/4"
- Robust construction
- Secondary pressure ranges
- Secondary aspiration plus balanced poppet provides quick response and accurate pressure regulation
- Relieving & non-relieving types
- Regulator will reverse flow as standard
- Non-rising knob

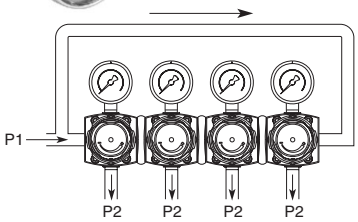

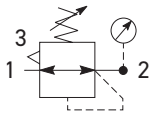

Self relieving regulator with gauge

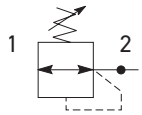

Non-relieving regulator

Port Size	Description (relieving)	Gauge	Part Number
1/4"	125 psig (8 bar)	None	**P32HB12BNNP**
3/8"	125 psig (8 bar)	None	**P32HB13BNNP**
1/2"	125 psig (8 bar)	None	**P32HB14BNNP**

Operating Information

Flow capacity*: 1/4, 3/8, 1/2	64 scfm (30 dm^3/s, ANR)
Operating temperature:	-25°C to 65.5°C (-13°F to 150°F)
Supply pressure (max):	300 psig (20 bar)
Adjusting range pressure:	0 to 30 psig (0 to 2 bar) 0 to 60 psig (0 to 4 bar) 0 to 125 psig (0 to 8 bar) 0 to 232 psig (0 to 16 bar)
Gauge port (2 each):	1/4 NPT, BSPP, BSPT
Weight:	0.50 lb (0.23 kg)

* Inlet pressure 145 psig (10 bar). Secondary pressure 91.3 psig (6.3 bar) and 14.5 psig (1 bar) pressure drop.

Ordering Information:

P32HB 1 4 B N N P

Basic Series

Global Modular Compact Regulator	P32HB

Thread Type

BSPP	1
NPT	9

Port Size †

1/4	2
3/8	3
1/2	4

† Working port 1/4".

Relief

Relieving	B
Non-Relieving	N

Adjustment

N	Non-Rising Knob
T	T-Handle

Adjustment Range

	With Round Gauge
Z	30 psig; 2 bar; 0.2 MPa
M	60 psig; 4 bar; 0.4 MPa
G	125 psig; 8 bar; 0.8 MPa
J	250 psig; 17 bar; 1.7 MPa
	Without Gauge
Y	30 psig; 2 bar; 0.2 MPa
L	60 psig; 4 bar; 0.4 MPa
N	125 psig; 8 bar; 0.8 MPa
H	250 psig; 17 bar; 1.7 MPa

* Regulator comes with gauge respective to the adjustment range selected.

Mounting

P	Plastic Panel Mount Nut

Most Popular

Material Specifications

Body	Aluminum
Adjustment knob	Acetal
Bonnet	Glass-filled nylon
Diaphragm assembly	Nitrile / zinc
Valve assembly	Brass / nitrile
Springs	Steel, stainless steel
Seals	Nitrile
Panel nut	Acetal

Flow Charts

P32HB Common Port Regulator

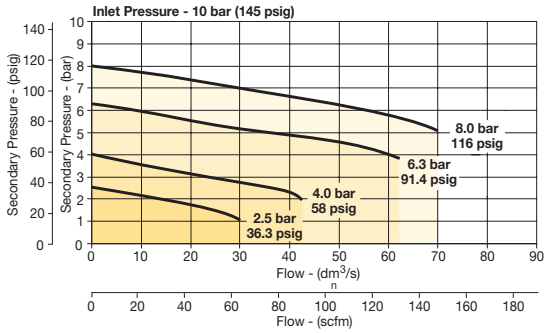

Repair and Service Kits

Panel mount nut - aluminum	**P32KA00MM**
Panel mount nut - plastic	**P32KA00MP**
Angle bracket (attaches via panel nut)	**P32KB00MR**
T-bracket with body connector	**P32KA00MT**
T-bracket	**P32KA00MB**
Body connector	**P32KA00CB**

⚠ WARNING

Product rupture can cause serious injury.
Do not connect regulator to bottled gas.
Do not exceed Maximum primary pressure rating.

CAUTION:

REGULATOR PRESSURE ADJUSTMENT – The working range of knob adjustment is designed to permit outlet pressures within their full range. Pressure adjustment beyond this range is also possible because the knob is not a limiting device. This is a common characteristic of most industrial regulators, and limiting devices may be obtained only by special design. For best performance, regulated pressure should always be set by increasing the pressure up to the desired setting.

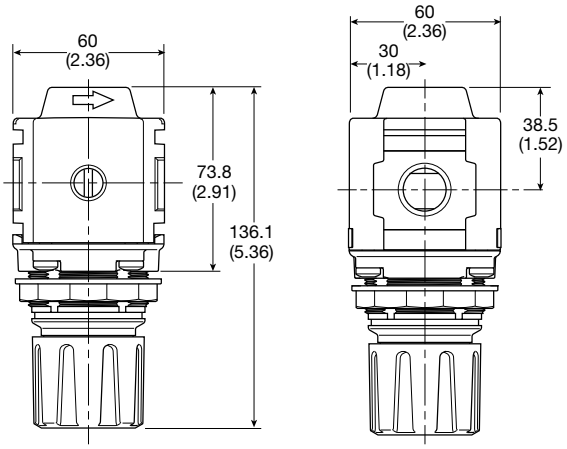

mm (Inches)

NOTE: 1.90 in. (48mm) hole required for panel nut mounting.

Gauges

50mm (2") round 1/4" center back mount	0-60 psig / 0-4 bar	**P6G-ERB2040**
	0-160 psig / 0-10 bar	**P6G-ERB2110**
	0-300 psig / 0-20 bar	**P6G-ERB2200**

For best performance, regulated pressure should always be set by increasing the pressure up to the desired setting.

Most Popular

P33 Regulators – Standard

- Integral 1/2" or 3/4" ports (NPT & BSPP)
- Robust but lightweight aluminum construction
- Secondary pressure ranges
- Secondary aspiration plus balanced poppet provides quick response and accurate pressure regulation
- Relieving & non-relieving types
- Non-rising knob

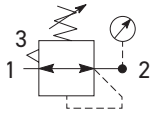

Self relieving regulator with gauge

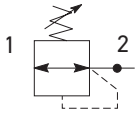

Non-relieving regulator

Port Size	Description (relieving)	Gauge	Part Number
1/2"	125 psig (8 bar)	None	**P33RA14BNGP**
3/4"	125 psig (8 bar)	None	**P33RA16BNGP**

Operating Information

Flow capacity*:	
1/2, 3/4	233 scfm (110 dm^3/s, ANR)
Operating temperature:	-13°F to 150°F (-25°C to 65.5°C)
Supply pressure (max):	300 psig (20 bar)
Adjusting range pressure:	0 to 30 psig (0 to 2 bar) 0 to 60 psig (0 to 4 bar) 0 to 125 psig (0 to 8 bar) 0 to 250 psig (0 to 17 bar)
Gauge port (2 each):	1/4 NPT, BSPP, BSPT
Weight:	1.37 lb (0.62 kg)

* Inlet pressure 145 psig (10 bar). Secondary pressure 91.3 psig (6.3 bar) and 14.5 psig (1 bar) pressure drop.

Ordering Information:

P33RA 1 6 B N G P

Basic Series

Global Modular Standard Regulator	P33RA

Thread Type

BSPP	1
NPT	9

Port Size

1/2	4
3/4	6

Relief

Relieving	B
Non-Relieving	N
Reverse Flow-Relieving	R

Adjustment

Non-Rising Knob	N

Adjustment Range

	With Round Gauge
Z	30 psig; 2 bar; 0.2 MPa
M	60 psig; 4 bar; 0.4 MPa
G	125 psig; 8 bar; 0.8 MPa
J	250 psig; 17 bar; 1.7 MPa
	Without Gauge
Y	30 psig; 2 bar; 0.2 MPa
L	60 psig; 4 bar; 0.4 MPa
N	125 psig; 8 bar; 0.8 MPa
H	250 psig; 17 bar; 1.7 MPa

Mounting

P	Plastic Panel Mount Nut

Most Popular

Material Specifications

Body	Aluminum
Adjustment knob	Acetal
Body cap	ABS
Bonnet	Glass-filled nylon
Diaphragm assembly Nitrile / zinc	
Valve assembly	Brass / nitrile
Springs	Steel, stainless steel
Seals	Nitrile
Panel nut	Acetal

Repair and Service Kits

Panel mount nut - aluminum	**P33KA00MM**
Panel mount nut - plastic	**P33KA00MP**
Angle bracket (attaches via panel nut)	**P33KA00MR**
T-bracket with body connector	**P32KA00MT**
T-bracket	**P32KA00MB**
Body connector	**P32KA00CB**

⚠ WARNING

Product rupture can cause serious injury.
Do not connect regulator to bottled gas.
Do not exceed Maximum primary pressure rating.

CAUTION:

REGULATOR PRESSURE ADJUSTMENT – The working range of knob adjustment is designed to permit outlet pressures within their full range. Pressure adjustment beyond this range is also possible because the knob is not a limiting device. This is a common characteristic of most industrial regulators, and limiting devices may be obtained only by special design. For best performance, regulated pressure should always be set by increasing the pressure up to the desired setting.

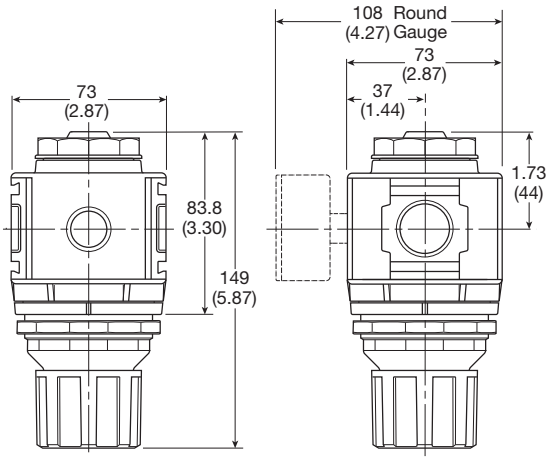

mm (Inches)

NOTE: 2.40 in. (61mm) hole required for panel nut mounting.

Flow Charts

P33RA 1/2" Regulator

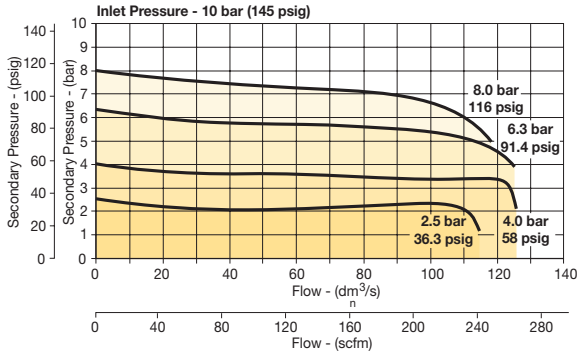

P33RA 3/4" Regulator

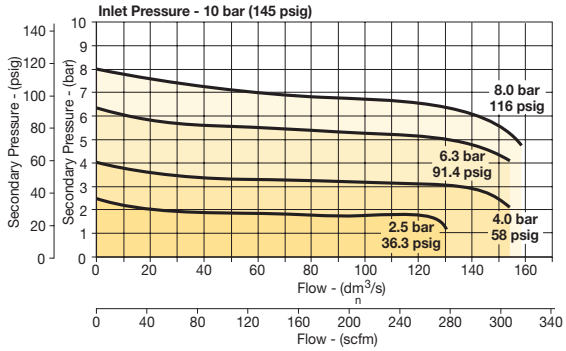

Gauges

50mm (2") round 1/4" center back mount	0-60 psig / 0-4 bar	**P6G-ERB2040**
	0-160 psig / 0-10 bar	**P6G-ERB2110**
	0-300 psig / 0-20 bar	**P6G-ERB2200**

For best performance, regulated pressure should always be set by increasing the pressure up to the desired setting.

Most Popular

P31P & P32P Proportional Regulators

- Very fast response times
- Accurate output pressure
- Parameter settings
- Selectable I/O parameters
- Quick, full flow exhaust
- LED display indicates output pressure
- No air consumption in steady state
- Multiple mounting options
- Protection to IP65

P31P Series
Bottom exhaust

P32P Series
Bottom exhaust

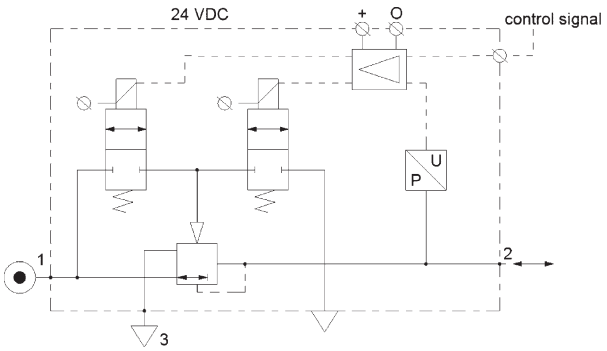

Port Size	Description	Part Number
1/4"	145 psig (0-10 bar), NC 0-10V	**P31PA12AD2VD1A**
1/2"	145 psig (0-10 bar), NC 0-10V	**P32PA14AD2VD1A**

Operating Information

Flow capacity*:	P31P	40 scfm (19 dm^3/s, ANR)
	P32P	120 scfm (57 dm^3/s, ANR)
Temperature range:		32°F to 122°F (0°C to 50°C)
Supply pressure (max):		
2 bar unit		36.3 psig (2.5 bar)
10 bar unit		152 psig (10.5 bar)
Operating pressure (min):		P2 pressure + 7.3 psig (0.5 bar)
Working medium:		Compressed air or inert gasses, filtered to 40µ
Pressure range:		0 to 30 psig (0 to 2 bar) 0 to 145 psig (0 to 10 bar)
Weight:	P31P	0.64 lb (0.291 kg)
	P32P	1.42 lb (0.645 kg)

* Inlet pressure 91.3 psig (6.3 bar), inlet pressure and 4.9 psig (0.34 bar) pressure drop.

Ordering Information:

P31PA 1 2 A S 2 V D 1 A

Body Size	
Global Modular Mini (1/4")	P31PA
Global Modular Compact (1/2")	P32PA

Thread Type	
BSPP	1
NPT	9

Port Size	
Global Modular Mini (1/4")	2
Global Modular Compact (1/2")	4

Version	
Bottom Ported Exhaust (NC)	A
Bottom Ported Forced Exhaust (NO)†	E

Pressure Range	
Z	0 - 2 bar (0-29 PSIG)
S	0 - 7 Bar (0-101 PSIG)
D	0 - 10 bar (0-145 PSIG)

Power Supply	
2	24 volts

Control Signal	
V	0-10V‡
A	4 - 20mA

‡ Factory setting is 0-10 V control signal. 4-20 mA control signal available via parameter 4 on keypad.

Output Signal	
D	Digital, PNP
P	PNP or 0-10V
N	NPN or 0-10V
M	4-20mA Fixed

D) Digital PNP output only, no analog output selectable
P) Digital PNP and analogue 0-10V outputs selectable, by means of parameter 6. (Factory default 0-10V)
N) Digital NPN and analog 0-10 V outputs selectable by means of parameter 6. Factory default 0-10V)
M) Analog 4-20mA output only.
Note: On all analog outputs the F.S. value can be adjusted by means of parameter 8.

Input Connector	
1	M12 (4-pin)

Most Popular

Technical Information

Accuracy

+/- 1.0% of F.S.*

* Full scale (F.S.) - For 2 bar (29 psig) versions this will be 2 bar (29 psig), for the 10 bar (145 psig) version full scale will be 10 bar (145 psig).

Air consumption

No consumption in stable regulated situation.

Display

The regulator is provided with a digital display, indicating the output pressure, either in bar or psig.
The factory setting is as indicated on the label, can be changed through to software at all times (parameter 14)

Supply voltage

24 VDC +/- 10%

Power consumption

Max. 1.1W with unloaded signal outputs

Control signals

The electronic pressure regulator can be externally controlled through an analogue control signal of either 0-10V or 4-20mA. (parameter 4).

Output signals

As soon as the output pressure is within the signal band a signal is given of 24VDC, PNP Ri = 1 kOhm
Outside the signal band this connection is 0V.

Connections

(In case of output signal (Option D)
Central M12 connector 4-pole
The electrical connections are as follows:

Pin No.		Function	Color
1	24 V	Supply	Brown
2	0 to 10 V	Control Signal Ri = 100k Ω	White
	4 to 20mA	Control Signal Ri = 500 Ω	
3	0 V (GND)	Supply & Set Point Ground	Blue
4	24 V	Alarm Output Signal	Black

Flow Charts

P31P Regulator 1/4" Ports

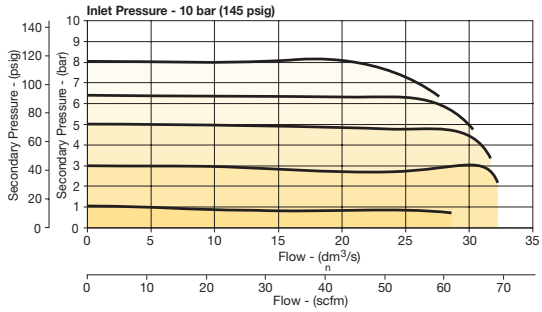

P32P Regulator 1/2" Ports

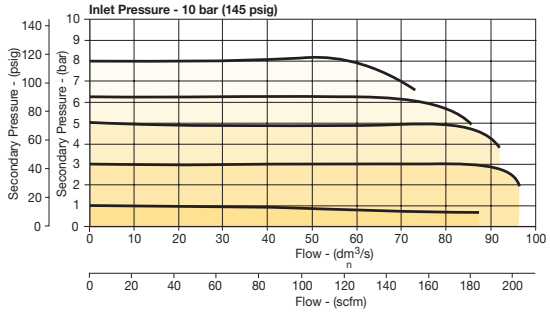

Degree of protection: IP65

EU conformity

CE: standard
EMC: according to directive 89/336/EEC
This pressure regulator is in accordance with:

EN 61000-6-1:2001 **EN 61000-6-2:2001**
EN 61000-6-3:2001 **EN 61000-6-4:2001**

Mounting position

Preferably vertical, with the cable gland on top.

Materials: P31P & P32P

Magnet core	Steel
Solenoid valve poppet	FPM
Solenoid valve housing	Techno polymer
Regulator body (P31P & P32P versions)	Aluminum
Regulator top housing	Nylon
Valve head	Brass & NBR
Remaining seals	NBR

P31P

Dimensions inches (mm)

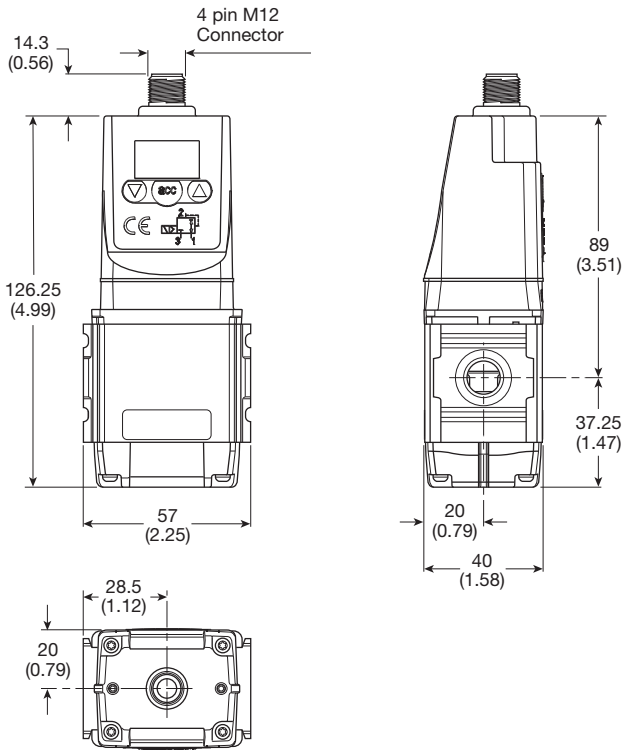

L-Bracket

P3HKA00ML

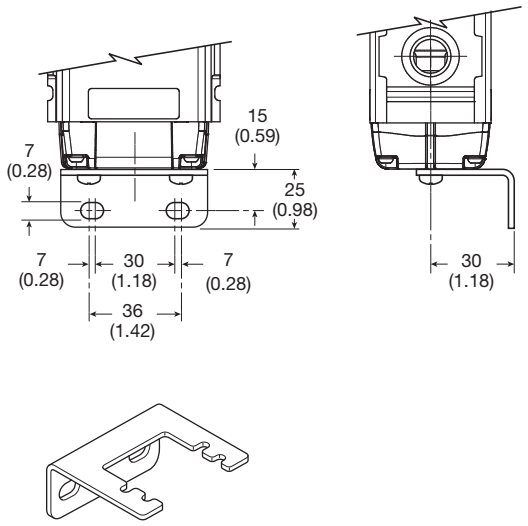

Foot Bracket

P3HKA00MC

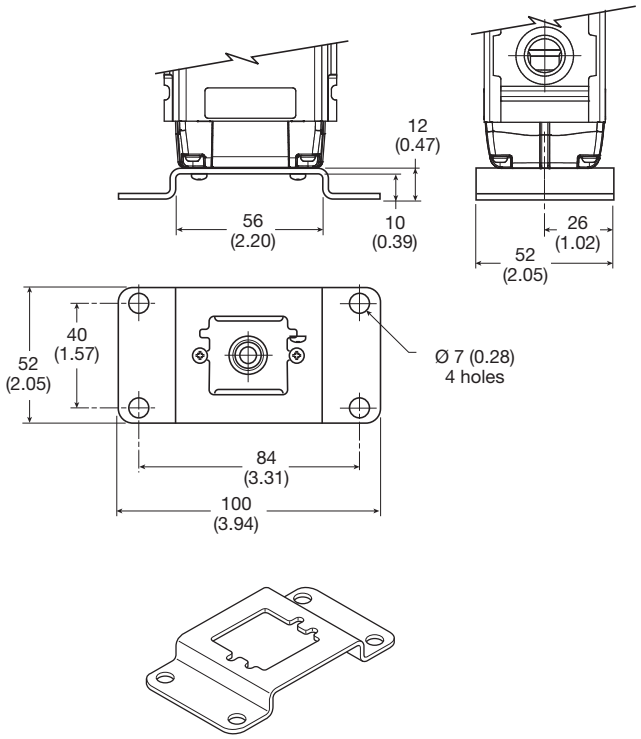

Cables

Description	Part Number
2 mtr. cable with moulded straight M12x1 connector	**CB-M12-4P-2M**

Most Popular

P32P

Dimensions inches (mm)

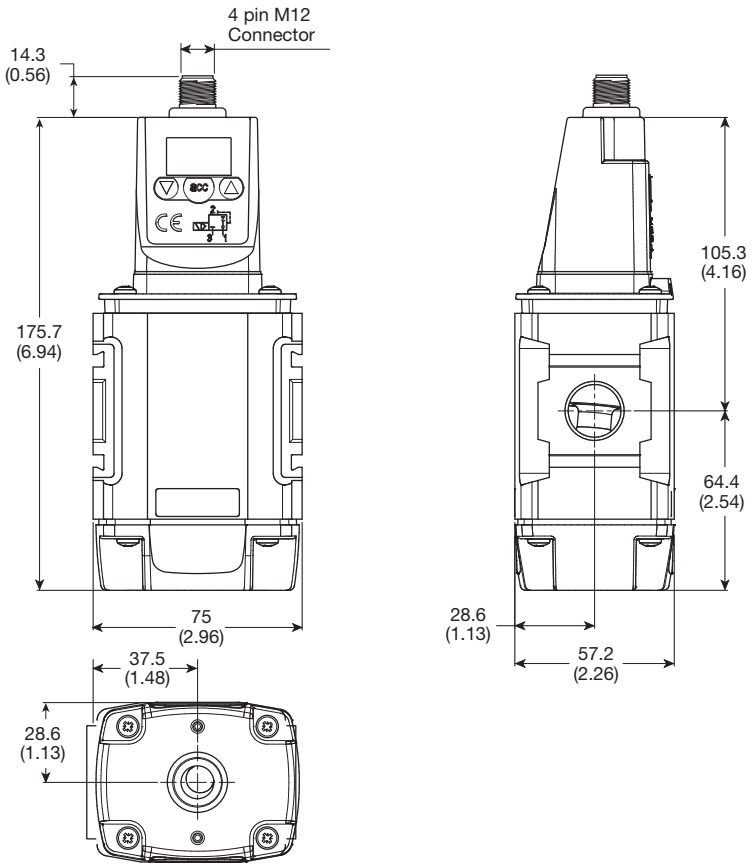

L-Bracket

P3KKA00ML

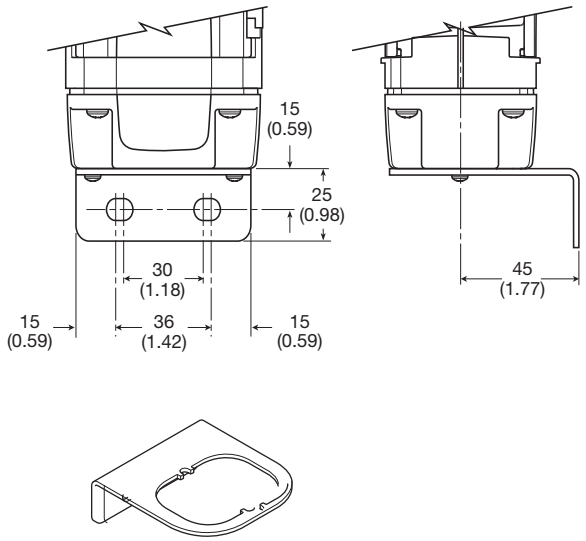

Foot Bracket

P3KKA00MC

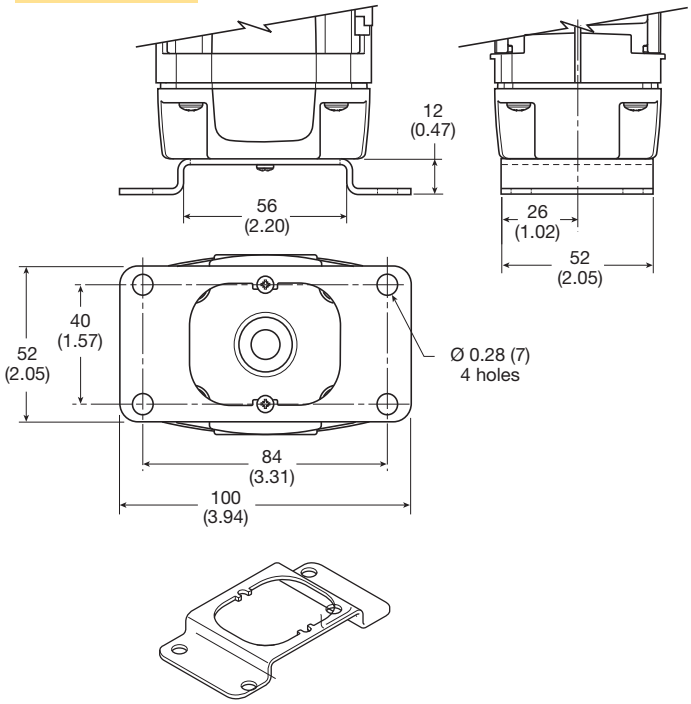

Cables

Description	Part Number
2 mtr. cable with moulded straight M12x1 connector	**CB-M12-4P-2M**

Most Popular

P31 Filter / Regulators – Mini

- Integral 1/4" ports (NPT & BSPP)
- High efficiency 5 micron element as standard
- Excellent water removal efficiency
- Robust but lightweight aluminum construction
- Positive bayonet latch to ensure correct & safe fitting
- Secondary pressure ranges
- Secondary aspiration plus balanced poppet provides quick response and accurate pressure regulation

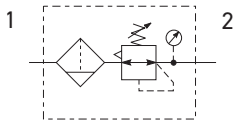

Port Size	Description (relieving)	Bowl / Drain Type ‡	Part Number
1/4"	125 psig (8 bar)	Poly / Manual	**P31EB12EGMBNTP**
1/4"	125 psig (8 bar)	Poly / Pulse	**P31EB12EGBBNTP**
1/4"	125 psig (8 bar)	Metal / Manual	**P31EB12EMMBNTP**
1/4"	125 psig (8 bar)	Metal / Pulse	**P31EB12EMBBNTP**

‡ For polycarbonate bowl, see caution in Engineering Section A.

Operating Information

Flow capacity*:	1/4	73 scfm (35 dm³/s, ANR)
Operating temperature‡:		
Plastic bowl		14°F to 125°F (-10°C to 52°C)
Metal bowl		14°F to 150°F (-10°C to 65.5°C)
Supply pressure (max):		
Plastic bowl		150 psig (10 bar)
Metal bowl		250 psig (17 bar)
Standard filtration		5 micron
Useful retention†:		0.4 US oz. (12 cm³)
Adjusting range pressure:		0 to 30 psig (0 to 2 bar) 0 to 60 psig (0 to 4 bar) 0 to 125 psig (0 to 8 bar) 0 to 250 psig (0 to 17 bar)
Weight:		0.42 lb (0.19 kg)

* Inlet pressure 145 psig (10 bar). Secondary pressure 91.3 psig (6.3 bar) and 14.5 psig (1 bar) pressure drop.
**Non-gauge option only.
‡ Units with square gauges: 5°F to 150°F (-15°C to 65.5°C)
† Useful retention refers to volume below the quiet zone baffle.

Gauge supplied with every part. Gauge can be installed on the front or back of the regulator. If no gauge is installed, both seal screws must be installed.

Ordering Information:

P31EB 1 2 E G M B N T P

Basic Series

Global Modular Mini Filter / Regulator	P31EB

Thread Type

BSPP	1
NPT	9

Element

5µ Element	E

Port Size

1/4	2

Bowl Type

Poly Bowl with Bowl Guard	G
Metal Bowl without Sight Gauge	M

Drain Type

Pulse Drain	B
Manual Drain	M

Relief

B	Relieving
N	Non-Relieving

Adjustment

N	Non-Rising Knob

Mounting

P	Plastic Panel Mount Nut

Adjustment Range With Square Gauge

psig (NPT Ports)	Bar (BSPP Ports)
1 = 30*	V = 2*
3 = 60	S = 4
5 = 125	T = 8
7 = 232	W = 16

* Regulator comes with gauge respective to the adjustment range selected.

Most Popular

Material Specifications

Body	Aluminum
Adjustment knob	Acetal
Body cap	ABS
Bonnet	Glass-filled nylon
Plastic bowl	Polycarbonate
Metal bowl	Aluminum
Bowl guard	Nylon
Filter element	Polyethylene
Seals	Nitrile
Springs	Steel
Valve assembly	Acetal/ Nitrile
Diaphragm assembly	Stainless Steel / Nitrile
Panel nut	Acetal

⚠ WARNING

Product rupture can cause serious injury.
Do not connect regulator to bottled gas.
Do not exceed Maximum primary pressure rating.

CAUTION:

REGULATOR PRESSURE ADJUSTMENT – The working range of knob adjustment is designed to permit outlet pressures within their full range. Pressure adjustment beyond this range is also possible because the knob is not a limiting device. This is a common characteristic of most industrial regulators, and limiting devices may be obtained only by special design. For best performance, regulated pressure should always be set by increasing the pressure up to the desired setting.

Flow Charts

P31EB 1/4" Filter / Regulator

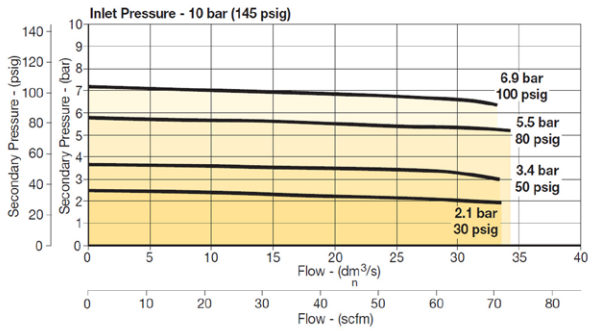

Repair and Service Kits

Plastic bowl / bowl guard manual drain	**P31KB00BGM**
Plastic bowl / bowl guard pulse drain	**P31KB00BGB**
Metal bowl / w/o sight gauge pulse drain	**P31KB00BMB**
5µ particle filter element	**P31KA00ESE**
Panel mount nut - aluminum	**P31KA00MM**
Panel mount nut - plastic	**P31KA00MP**
Angle bracket (attaches via panel nut)	**P31KB00MR**
C-bracket (fits to body)	**P31KA00MW**
T-bracket with body connector	**P31KA00MT**
Body connector	**P31KA00CB**

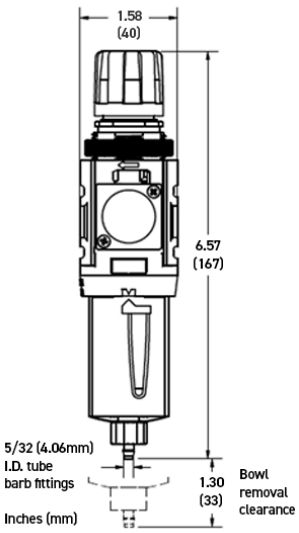

Manual Drain

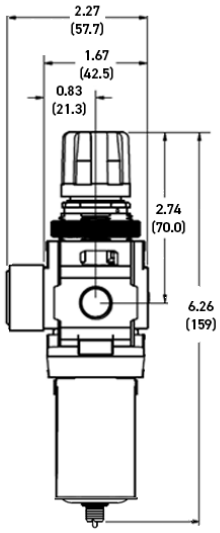

Pulse Drain

Square gauge supplied with every part. Gauge can be installed on the front or back of the regulator. If no gauge is installed, both seal screws must be installed.

Most Popular

P32 Filter / Regulators – Compact

- Integral 1/4", 3/8" or 1/2" ports (NPT & BSPP)
- High efficiency 5 micron element as standard
- Excellent water removal efficiency
- Robust but lightweight aluminum construction
- Positive bayonet latch to ensure correct & safe fitting
- Secondary pressure ranges
- Secondary aspiration plus balanced poppet provides quick response and accurate pressure regulation

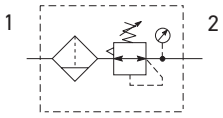

Port Size	Description (relieving)	Bowl / Drain Type ‡	Part Number
1/4"	125 psig (8 bar)	Poly / Manual	**P32EB12EGMBNGP**
1/4"	125 psig (8 bar)	Poly / Auto	**P32EB12EGABNGP**
1/4"	125 psig (8 bar)	Metal / Manual	**P32EB12ESMBNGP**
1/4"	125 psig (8 bar)	Metal / Auto	**P32EB12ESABNGP**
3/8"	125 psig (8 bar)	Poly / Manual	**P32EB13EGMBNGP**
3/8"	125 psig (8 bar)	Poly / Auto	**P32EB13EGABNGP**
3/8"	125 psig (8 bar)	Metal / Manual	**P32EB13ESMBNGP**
3/8"	125 psig (8 bar)	Metal / Auto	**P32EB13ESABNGP**
1/2"	125 psig (8 bar)	Poly / Manual	**P32EB14EGMBNGP**
1/2"	125 psig (8 bar)	Poly / Auto	**P32EB14EGABNGP**
1/2"	125 psig (8 bar)	Metal / Manual	**P32EB14ESMBNGP**
1/2"	125 psig (8 bar)	Metal / Auto	**P32EB14ESABNGP**

‡ For polycarbonate bowl, see caution in Engineering Section A.

Operating Information

Flow capacity*:	1/4	148 scfm (70 dm3/s, ANR)
	3/8	158 scfm (75 dm3/s, ANR)
	1/2	164 scfm (77 dm3/s, ANR)
Operating temperature:		
Plastic bowl		-13°F to 125°F (-25°C to 52°C)
Metal bowl		-13°F to 150°F (-25°C to 65.5°C)
Supply pressure (max):		
Plastic bowl		150 psig (10 bar)
Metal bowl		250 psig (17 bar)
Standard filtration:		5 micron
Useful retention†:		1.7 US oz. (51 cm^3)
Adjusting range pressure:		0 to 30 psig (0 to 2 bar) 0 to 60 psig (0 to 4 bar) 0 to 125 psig (0 to 8 bar) 0 to 250 psig (0 to 17 bar)
Gauge port (2 each):		1/4 NPT, BSPP, BSPT
Weight:		1.17 lb (0.53 kg)

* Inlet pressure 145 psig (10 bar). Secondary pressure 91.3 psig (6.3 bar) and 14.5 psig (1 bar) pressure drop.
† Useful retention refers to volume below the quiet zone baffle.

Ordering Information:

P32EB 1 4 E G M B N G P

Basic Series

Global Modular Compact Filter / Regulator	P32EB

Thread Type

BSPP	1
NPT	9

Element

5µ Element	E

Port Size

1/4	2
3/8	3
1/2	4

Bowl Type

Poly Bowl with Bowl Guard	G
Metal Bowl without Sight Gauge	M
Metal Bowl with Sight Gauge	S

Drain Type

Manual Drain	M
Auto Drain	A
Flex Drain	X

Relief

B	Relieving
N	Non-Relieving

Adjustment

N	Non-Rising Knob
T	T-Handle

Adjustment Range

	With Round Gauge
Z	30 psig; 2 bar; 0.2 MPa
M	60 psig; 4 bar; 0.4 MPa
G	125 psig; 8 bar; 0.8 MPa
J§	250 psig; 17 bar; 1.7 MPa
	Without Gauge
Y	30 psig; 2 bar; 0.2 MPa
L	60 psig; 4 bar; 0.4 MPa
N	125 psig; 8 bar; 0.8 MPa
H§	250 psig; 17 bar; 1.7 MPa

* Regulator comes with gauge respective to the adjustment range selected.
§ Not available with poly bowl with bowl guard.

Most Popular

Material Specifications

Body	Aluminum
Adjustment knob	Acetal
Element retainer / baffle	Acetal
Plastic bowl	Polycarbonate
Metal bowl	Aluminum
Bowl guard	Nylon
Filter element	Sintered polyethylene
Seals	Nitrile
Springs	Steel, stainless steel
Valve assembly	Brass / nitrile
Diaphragm assembly Nitrile / zinc	
Panel nut	Acetal
Sight gauge	Nylon

Repair and Service Kits

Plastic bowl / bowl guard manual drain	**P32KB00BGM**
Metal bowl / sight gauge manual drain	**P32KB00BSM**
Auto drain	**P32KA00DA**
5µ particle filter element	**P32KA00ESE**
Panel mount nut - aluminum	**P32KA00MM**
Panel mount nut - plastic	**P32KA00MP**
Angle bracket (fits to panel mount threads)	**P32KB00MR**
T-bracket (fits to body connector)	**P32KA00MB**
T-bracket with body connector	**P32KA00MT**
Body connector	**P32KA00CB**

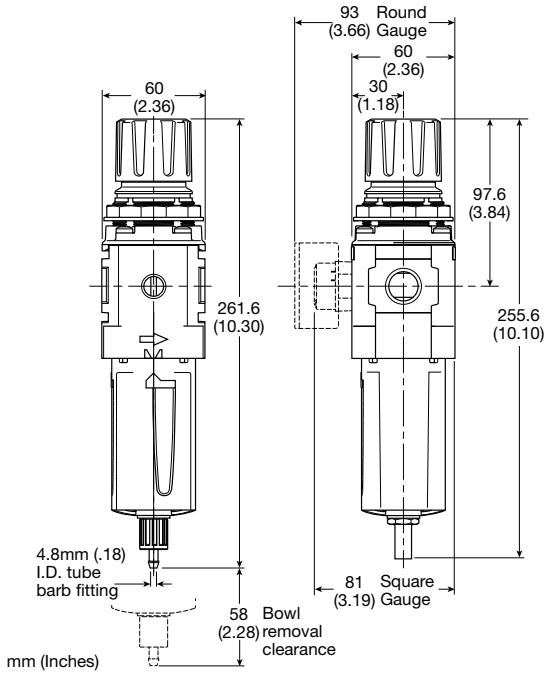

Manual Drain **Automatic Drain**

Most Popular

Flow Charts

P32EB 1/4" Filter / Regulator

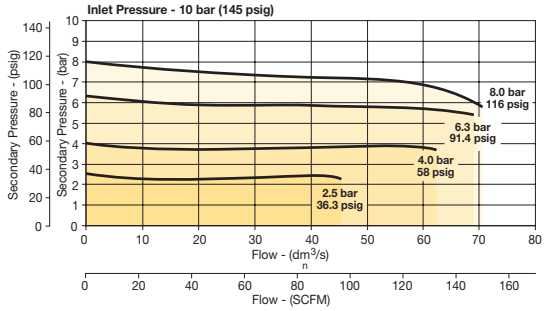

P32EB3/8" Filter/Regulator

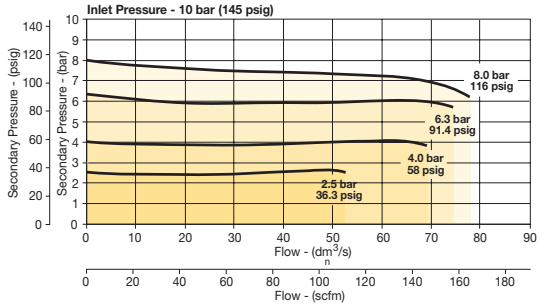

P32EB 1/2" Filter/Regulator

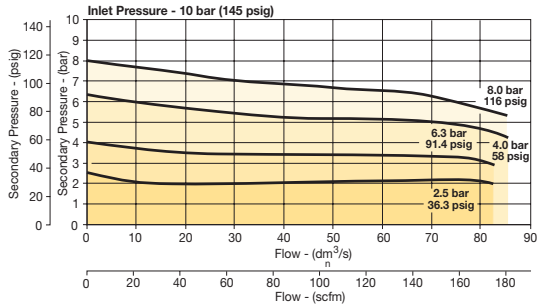

⚠ WARNING

Product rupture can cause serious injury.
Do not connect regulator to bottled gas.
Do not exceed Maximum primary pressure rating.

CAUTION:

REGULATOR PRESSURE ADJUSTMENT – The working range of knob adjustment is designed to permit outlet pressures within their full range. Pressure adjustment beyond this range is also possible because the knob is not a limiting device. This is a common characteristic of most industrial regulators, and limiting devices may be obtained only by special design. For best performance, regulated pressure should always be set by increasing the pressure up to the desired setting.

Gauges

50mm (2") round 1/4" center back mount	0-60 psig / 0-4 bar	**P6G-ERB2040**
	0-160 psig / 0-10 bar	**P6G-ERB2110**
	0-300 psig / 0-20 bar	**P6G-ERB2200**

For best performance, regulated pressure should always be set by increasing the pressure up to the desired setting.

P33 Filter / Regulators – Standard

- Integral 1/2" or 3/4" ports (NPT & BSPP)
- High efficiency 5 micron element as standard
- Excellent water removal efficiency
- Robust but lightweight aluminum construction
- Positive bayonet latch to ensure correct & safe fitting
- Secondary pressure ranges
- Secondary aspiration plus balanced poppet provides quick response and accurate pressure regulation

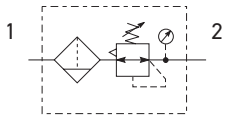

Port Size	Description / Relieving	Bowl / Drain Type ‡	Part Number
1/2"	125 psig (8 bar)	Poly / Manual	**P33EA14EGMBNGP**
1/2"	125 psig (8 bar)	Poly / Auto	**P33EA14EGABNGP**
1/2"	125 psig (8 bar)	Metal / Manual	**P33EA14ESMBNGP**
1/2"	125 psig (8 bar)	Metal / Auto	**P33EA14ESABNGP**
3/4"	125 psig (8 bar)	Poly / Manual	**P33EA16EGMBNGP**
3/4"	125 psig (8 bar)	Poly / Auto	**P33EA16EGABNGP**
3/4"	125 psig (8 bar)	Metal / Manual	**P33EA16ESMBNGP**
3/4"	125 psig (8 bar)	Metal / Auto	**P33EA16ESABNGP**

‡ For polycarbonate bowl, see caution in Engineering Section A.

Operating Information

Flow capacity*:	1/2	200 scfm (94 dm³/s, ANR)
	3/4	235 scfm (109 dm³/s, ANR)
Operating temperature:		
Plastic bowl		-13°F to 125°F (-25°C to 52°C)
Metal bowl		-13°F to 150°F (-25°C to 65.5°C)
Supply pressure (max):		
Plastic bowl		150 psig (10 bar)
Metal bowl		250 psig (17 bar)
Standard filtration:		5 micron
Useful retention†:		2.8 US oz. (85 cm³)
Adjusting range pressure:		0 to 30 psig (0 to 2 bar) 0 to 60 psig (0 to 4 bar) 0 to 125 psig (0 to 8 bar) 0 to 250 psig (0 to 17 bar)
Gauge port (2 each):		1/4 NPT, BSPP, BSPT
Weight:		1.87 lb. (0.85 kg)

* Inlet pressure 145 psig (10 bar). Secondary pressure 91.3 psig (6.3 bar) and 14.5 psig (1 bar) pressure drop.

† Useful retention refers to volume below the quiet zone baffle.

Ordering Information:

P33EA 1 6 E G M B N G P

Basic Series

Global Modular Standard Filter / Regulator	P33EA

Thread Type

BSPP	1
NPT	9

Element

5µ Element	E

Port Size

1/2	4
3/4	6

Bowl Type

Poly Bowl with Bowl Guard	G
Metal Bowl without Sight Gauge	M
Metal Bowl with Sight Gauge	S

Drain Type

M	Manual Drain
A	Auto Drain

Relief

B	Relieving
N	Non-Relieving

Adjustment

N	Non-Rising Knob

Adjustment Range

	With Round Gauge
Z	30 psig; 2 bar; 0.2 MPa
M	60 psig; 4 bar; 0.4 MPa
G	125 psig; 8 bar; 0.8 MPa
J§	250 psig; 17 bar; 1.7 MPa
	Without Gauge
Y	30 psig; 2 bar; 0.2 MPa
L	60 psig; 4 bar; 0.4 MPa
N	125 psig; 8 bar; 0.8 MPa
H§	250 psig; 17 bar; 1.7 MPa

§ Not available with poly bowl with bowl guard.

Mounting

P	Plastic Panel Mount Nut

Most Popular

Material Specifications

Body	Aluminum
Adjustment knob	Acetal
Body cap	ABS
Element retainer / baffle	Acetal
Plastic bowl	Polycarbonate
Metal bowl	Aluminum
Filter element	Sintered Polyethylene
Seals	Nitrile
Springs	Steel, stainless steel
Valve assembly	Brass / nitrile
Diaphragm assembly Nitrile / zinc	
Panel nut	Acetal
Sight gauge	Nylon

Repair and Service Kits

Plastic bowl / bowl guard, manual drain	**P33KA00BGM**
Metal bowl / sight gauge, manual drain	**P33KA00BSM**
Auto drain	**P32KA00DA**
5µ particle filter element	**P33KA00ESE**
Panel mount nut - Aluminum	**P33KA00MM**
Panel mount nut - Plastic	**P33KA00MP**
Angle bracket (fits to panel mount threads)	**P33KA00MR**
T-bracket (fits to body connector)	**P32KA00MB**
T-bracket with body connector	**P32KA00MT**
Body connector	**P32KA00CB**

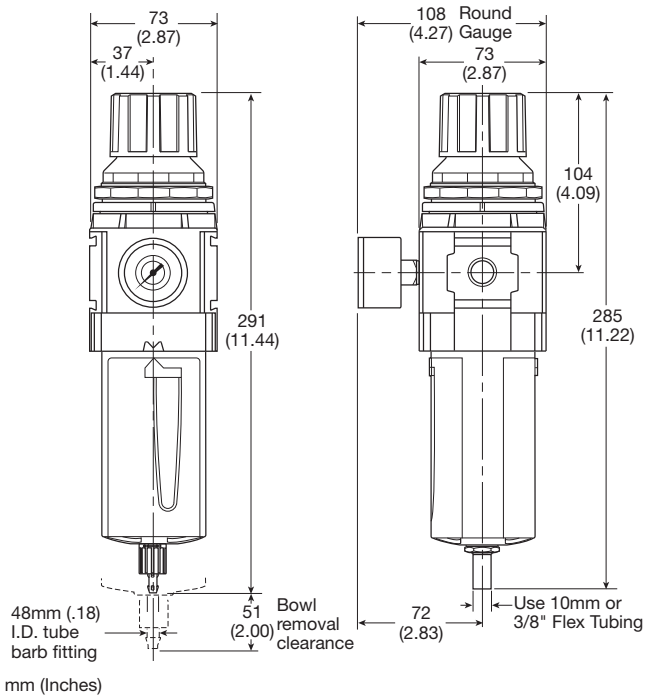

Manual Drain **Automatic Drain**

Most Popular

Flow Charts

P33EA 1/2" Filter / Regulator

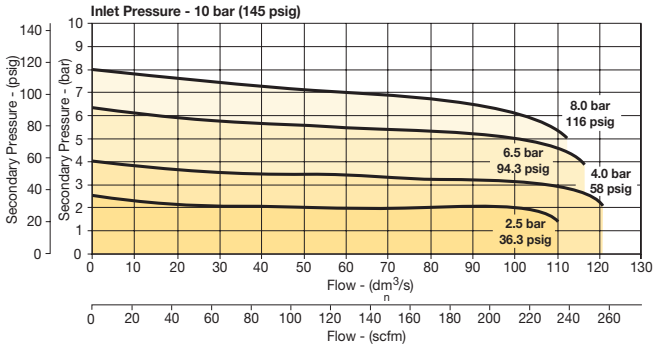

P33EA 3/4" Filter/Regulator

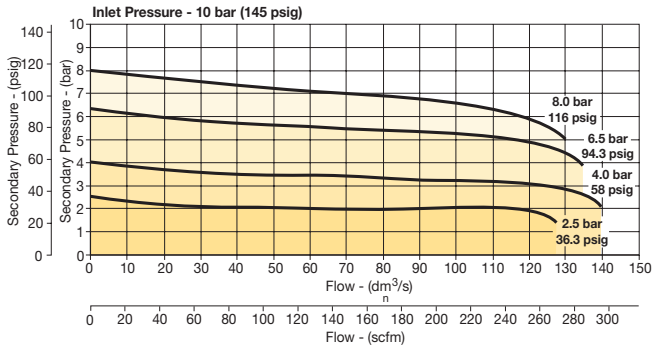

⚠ WARNING

Product rupture can cause serious injury.
Do not connect regulator to bottled gas.
Do not exceed Maximum primary pressure rating.

CAUTION:

REGULATOR PRESSURE ADJUSTMENT – The working range of knob adjustment is designed to permit outlet pressures within their full range. Pressure adjustment beyond this range is also possible because the knob is not a limiting device. This is a common characteristic of most industrial regulators, and limiting devices may be obtained only by special design. For best performance, regulated pressure should always be set by increasing the pressure up to the desired setting.

Gauges

50mm (2") round 1/4" center back mount	0-60 psig / 0-4 bar	**P6G-ERB2040**
	0-160 psig / 0-10 bar	**P6G-ERB2110**
	0-300 psig / 0-20 bar	**P6G-ERB2200**

For best performance, regulated pressure should always be set by increasing the pressure up to the desired setting.

P31 Lubricators – Mini

- Integral 1/4" ports (NPT & BSPP)
- Robust but lightweight aluminum construction
- Proportional oil delivery over a wide range of air flows
- Finger tip ratchet control for precise oil drip rate adjustment

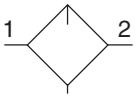

Lubricator
with drain

Port Size	Description ‡	Part Number
1/4"	Poly Bowl - No Drain	**P31LB12LGNN**
1/4"	Metal Bowl - No Drain	**P31LB12LMNN**

‡ For polycarbonate bowl, see caution in Engineering Section A.

Operating Information

Flow capacity*:	
1/4	52 scfm (25 dm^3/s, ANR)
Operating temperature:	
Plastic bowl	14°F to 125°F (-10°C to 52°C)
Metal bowl	14°F to 150°F (-10°C to 65.5°C)
Supply pressure (max):	
Plastic bowl	150 psig (10 bar)
Metal bowl	250 psig (17 bar)
Bowl capacity:	0.6 US oz. (18 cm^3)
Weight:	0.29 lb (0.13 kg)

* Inlet pressure 91.3 psig (6.3 bar). Pressure drop 4.9 psig (0.34 bar).

Ordering Information:

P31LB 1 2 L G N N

Basic Series

Global Modular Mini Lubricator	P31LB

Thread Type

BSPP	1
NPT	9

Port Size

1/4	2

Lube Type

Oil Mist Standard Sight Dome	L

Bowl Type

G	Poly Bowl with Bowl Guard
M	Metal Bowl without Sight Gauge

Drain Type

N	No Drain Closed End

Mounting

N	No Bracket

Suggested Lubricant
Petroleum based oil of 100 to 200 SUS viscosity at 100°F (38°C) and an aniline point greater than 200°F (93°C)
(DO NOT USE OILS WITH ADDITIVES, COMPOUNDED OILS CONTAINING SOLVENTS, GRAPHITE, DETERGENTS, OR SYNTHETIC OILS.)

Most Popular

Material Specifications

Body	Aluminum
Body cap	ABS
Plastic bowl	Polycarbonate
Metal bowl	Aluminum
Seals	Nitrile
Sight dome	Polycarbonate
Suggested lubricant	ISO / ASTM VG32
Pick-up filter	Sintered bronze

Flow Charts

P31LB 1/4" Lubricator

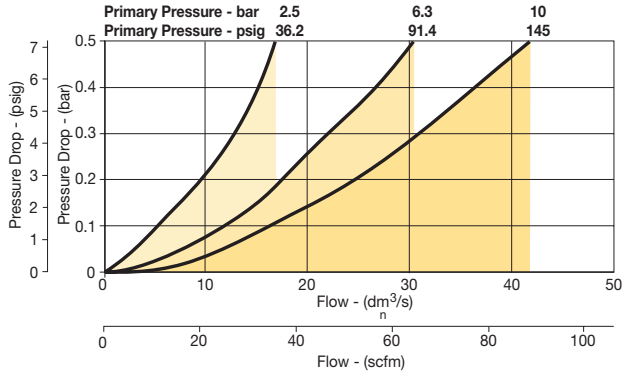

Repair and Service Kits

Plastic bowl / bowl guard no drain	**P31KB00BGN**
Metal bowl / w/o sight gauge no drain	**P31KB00BMN**
Drip control assembly	**P32KA00PG**
Fill plug	**P31KA00PL**
C-bracket (fits to body)	**P31KA00MW**
T-bracket with body connector	**P31KA00MT**
Body connector	**P31KA00CB**
Lubricator oil - VG32 - 1 litre	**P3YKA00PPBB**

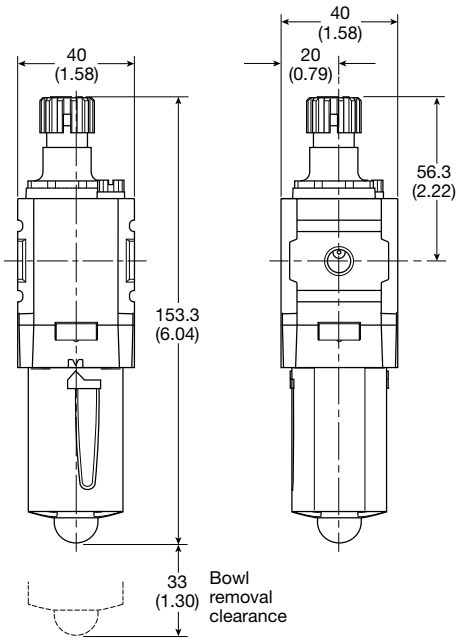

mm (Inches)

Most Popular

P32 Lubricators – Compact

- Integral 1/4", 3/8" or 1/2" ports (NPT & BSPP)
- Robust but lightweight aluminum construction
- Proportional oil delivery over a wide range of air flows
- Finger tip ratchet control for precise oil drip rate adjustment
- Fill from top under system pressure

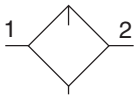

Lubricator
with drain

Port Size	Description ‡	Part Number
1/4"	Poly Bowl - No Drain	**P32LB12LGNN**
1/4"	Metal Bowl - No Drain	**P32LB12LSNN**
3/8"	Poly Bowl - No Drain	**P32LB13LGNN**
3/8"	Metal Bowl - No Drain	**P32LB13LSNN**
1/2"	Poly Bowl - No Drain	**P32LB14LGNN**
1/2"	Metal Bowl - No Drain	**P32LB14LSNN**

‡ For polycarbonate bowl, see caution in Engineering Section A.

Operating Information

Flow capacity*:	
1/4	38 scfm (17 dm^3/s, ANR)
3/8	70 scfm (33 dm^3/s, ANR)
1/2	90 scfm (42 dm^3/s, ANR)
Operating temperature:	
Plastic bowl	14°F to 125°F (-10°C to 52°C)
Metal bowl	14°F to 150°F (-10°C to 65.5°C)
Supply pressure (max):	
Plastic bowl	150 psig (10 bar)
Metal bowl	250 psig (17 bar)
Bowl capacity:	4.09 US oz. (121 cm^3)
Weight:	0.68 lb (0.31 kg)

* Inlet pressure 91.3 psig (6.3 bar). Pressure drop 4.9 psig (0.34 bar).

Ordering Information:

P32LB 1 4 L G N N

Basic Series

Global Modular Compact Lubricator	P32LB

Thread Type

BSPP	1
NPT	9

Port Size

1/4	2
3/8	3
1/2	4

Lube Type

Oil Mist Standard Sight Dome	L

Bowl Type

G	Poly Bowl with Bowl Guard
S	Metal Bowl with Sight Gauge

Drain Type

N	No Drain Closed End

Mounting

N	No Bracket

Suggested Lubricant

Petroleum based oil of 100 to 200 SUS viscosity at 100°F (38°C) and an aniline point greater than 200°F (93°C)

(DO NOT USE OILS WITH ADDITIVES, COMPOUNDED OILS CONTAINING SOLVENTS, GRAPHITE, DETERGENTS, OR SYNTHETIC OILS.)

Most Popular

Material Specifications

Body	Aluminum
Body cap	ABS
Plastic bowl	Polycarbonate
Metal bowl	Aluminum
Seals	Nitrile
Sight dome	Polycarbonate
Sight gauge	Nylon
Suggested lubricant	ISO / ASTM VG32
Pick-up filter	Sintered bronze

Repair and Service Kits

Plastic bowl / bowl guard no drain	**P32KB00BGN**
Metal bowl / w/o sight gauge no drain	**P32KB00BMN**
Metal bowl / Sight gauge no drain	**P32KB00BSN**
Drip control assembly	**P32KA00PG**
Fill plug	**P32KA00PL**
L-bracket (fits to body)	**P32KA00ML**
T-bracket (fits to body connector)	**P32KA00MB**
T-bracket with body connector	**P32KA00MT**
Body connector	**P32KA00CB**
Lubricator oil - VG32 - 1 litre	**P3YKA00PPBB**

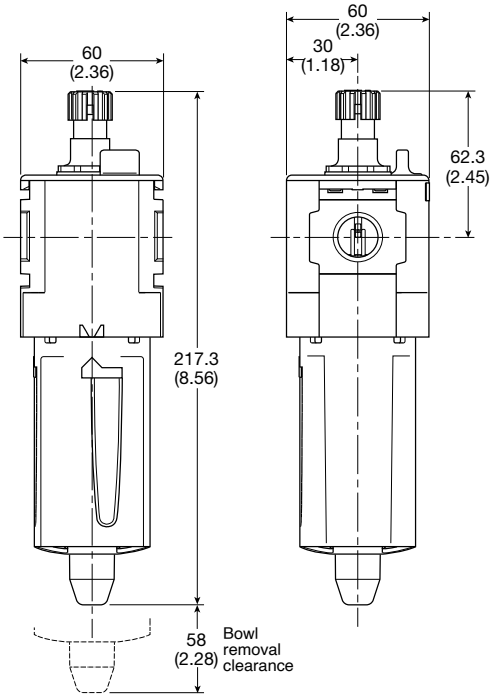

mm (Inches)

Flow Charts

P32LB 1/4" Lubricator

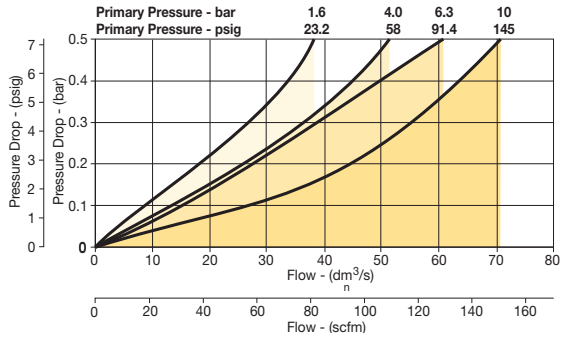

P32LB 3/8" Lubricator

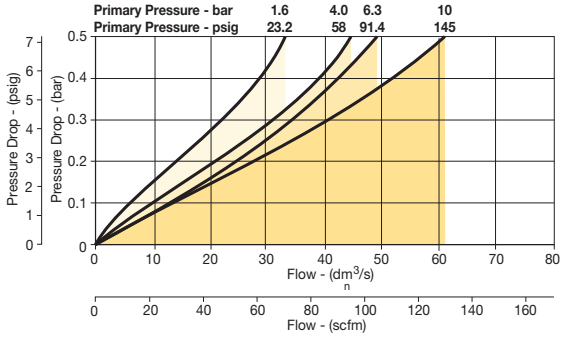

P32LB 1/2" Lubricator

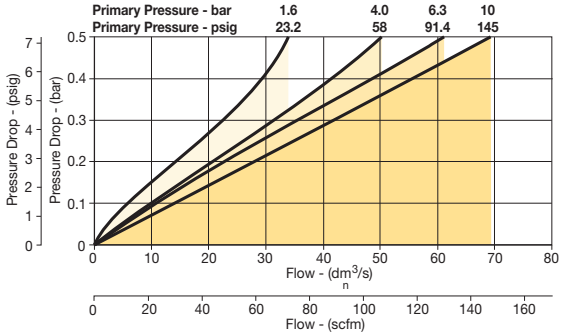

Most Popular

P33 Lubricators – Standard

- Integral 1/2" or 3/4" ports (NPT & BSPP)
- Robust but lightweight aluminum construction
- Proportional oil delivery over a wide range of air flows
- Finger tip ratchet control for precise oil drip rate adjustment
- Fill from top under system pressure

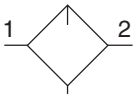

Lubricator
with drain

Port Size	Description ‡	Part Number
1/2"	Poly Bowl - No Drain	**P33LA14LGNN**
1/2"	Metal Bowl - No Drain	**P33LA14LSNN**
3/4"	Poly Bowl - No Drain	**P33LA16LGNN**
3/4"	Metal Bowl - No Drain	**P33LA16LSNN**

‡ For polycarbonate bowl, see caution in Engineering Section A.

Operating Information

Flow capacity*:	
1/2	110 scfm (52 dm^3/s, ANR)
3/4	150 scfm (71 dm^3/s, ANR)
Operating temperature:	
Plastic bowl	14°F to 125°F (-10°C to 52°C)
Metal bowl	14°F to 150°F (-10°C to 65.5°C)
Supply pressure (max):	
Plastic bowl	150 psig (10 bar)
Metal bowl	250 psig (17 bar)
Bowl capacity:	6.1 US oz. (181 cm^3)
Weight:	1.04 lb (0.47 kg)

* Inlet pressure 91.3 psig (6.3 bar). Pressure drop 4.9 psig (0.34 bar).

Ordering Information:

P33LA 1 6 L G N N

Basic Series

Global Modular Standard Lubricator	P33LA

Thread Type

BSPP	1
NPT	9

Port Size

1/2	4
3/4	6

Lube Type

Oil Mist Standard Sight Dome	L

Bowl Type

G	Poly Bowl with Bowl Guard
S	Metal Bowl with Sight Gauge

Drain Type

N	No Drain Closed End

Mounting

N	No Bracket

Suggested Lubricant

Petroleum based oil of 100 to 200 SUS viscosity at 100°F (38°C) and an aniline point greater than 200°F (93°C)

(DO NOT USE OILS WITH ADDITIVES, COMPOUNDED OILS CONTAINING SOLVENTS, GRAPHITE, DETERGENTS, OR SYNTHETIC OILS.)

Most Popular

Material Specifications

Body	Aluminum
Body cap	ABS
Plastic bowl	Polycarbonate
Metal bowl	Aluminum
Seals	Nitrile
Sight dome	Polycarbonate
Sight gauge	Nylon
Suggested lubricant	ISO / ASTM VG32
Pick-up filter	Sintered bronze

Repair and Service Kits

Plastic bowl / bowl guard no drain	**P33KA00BGN**
Metal bowl / w/o sight gauge no drain	**P33KA00BMN**
Metal bowl / sight gauge no drain	**P33KA00BSN**
Drip control assembly	**P32KA00PG**
Fill plug	**P32KA00PL**
L-bracket (fits to body)	**P33KA00ML**
T-bracket (fits to body connector)	**P32KA00MB**
T-bracket with body connector	**P32KA00MT**
Body connector	**P32KA00CB**
Lubricator oil - VG32 - 1 litre	**P3YKA00PPBB**

Flow Charts

P33LA 1/2" Lubricator

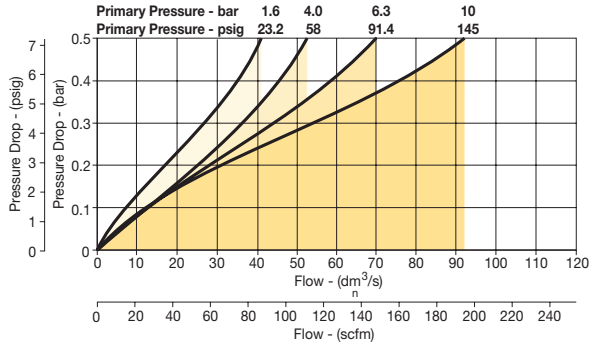

P33LA 3/4" Lubricator

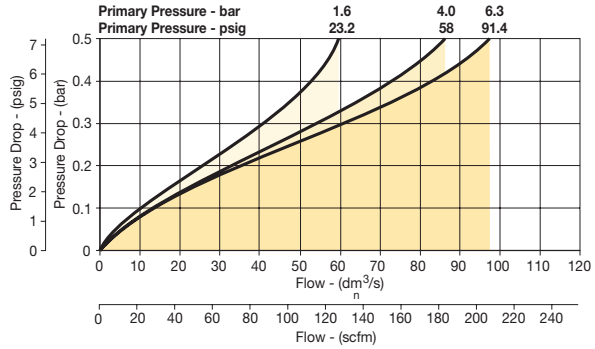

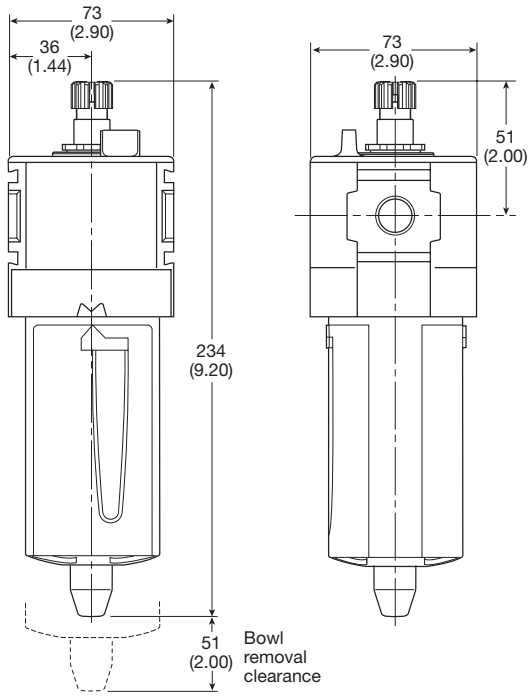

mm (Inches)

Most Popular

Popular Combinations: Inlet pressure 145 psig (10 bar), secondary pressure 91.3 psig (6.3 bar), 14.5 psig (1 bar) pressure drop.

Filter + Regulator + Lubricator Combinations, poly bowl
5 micron element, 116 psig (8 bar) regulator + gauge and wall mounting brackets

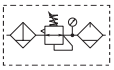

Port Size	Flow	Manual Drain	Pulse Drain
1/4"	27 scfm (13 dm³/s, ANR)	**P31CB12GEMNTLNW**	**P31CB12GEBNTLNW**

Filter/Regulator + Lubricator Combinations, poly bowl
5 micron element, 116 psig (8 bar) regulator + gauge and wall mounting brackets

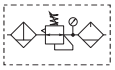

Port Size	Flow	Manual Drain	Pulse Drain
1/4"	28 scfm (14 dm³/s, ANR)	**P31CA12GEMNTLNW**	**P31CA12GEBNTLNW**

Ball Valve + Filter + Regulator + Lubricator Combinations, poly bowl
5 micron element, 116 psig (8 bar) regulator + gauge and wall mounting brackets

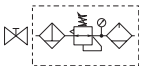

Port Size	Flow	Manual Drain	Pulse Drain
1/4"	27 scfm (13 dm³/s, ANR)	**P31QB12GEMNTLNW**	**P31QB12GEBNTLNW**

Ball Valve + Filter/Regulator + Lubricator Combinations, poly bowl
5 micron element, 116 psig (8 bar) regulator + gauge and wall mounting brackets

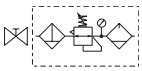

Port Size	Flow	Manual Drain	Pulse Drain
1/4"	28 scfm (14 dm³/s, ANR)	**P31QA12GEMNTLNW**	**P31QA12GEBNTLNW**

All combo are without any mounting nut on regulator or filter regulator.

Use end port blocks to convert a 1/4 BSPP combo to an NPT version

P31 | C | B | 1 | 2 | G

Combination

B/V + Combination	Q
Combination + B/V	X
Combination	C

B/V = Ball valve

Thread Type

BSPP	1
NPT	9

Port Size

1/4	2

Combination Type*

F/R+L	A	F+Fc+Fa	G
F+R+L	B	F/R+Fc	M
F+Fc	F		

* Combination type
F = 5µ
Fc1 = 1µ
Fc = .01µ
Fa = Adsorber

Bowl Type

Poly Bowl with Bowl Guard ‡	G
Metal Bowl without Sight Gauge	M

Note: All bowl types are the same for each component

Example: If a "G" is specified for a F+L, both units would get a poly bowl with bowl guard.

‡ For polycarbonate bowl, see caution in Engineering Section A.

Filter / Regulator coding
(use with codes: A M)

Filter coding
(use with combo codes: B F G). **For multiple filters, repeat as needed.**

E | M

Element

5µ Element	E
0.01µ Element	C
1µ Element	9
Adsorber	A

Drain Type

Manual Drain	M
Pulse Drain	B

Regulator coding
(use with combo code: B)

N | T

Relief / Adjustment

Non-Rising Knob	N

Adjustment Range

With Square Gauge	
Psig:	
30 psig*	1
60 psig	3
125 psig	5
232 psig§	7
Bar:	
2 Bar*	V
4 Bar	S
8 Bar	T
16 Bar§	W

* Regulator comes with gauge respective to the adjustment range selected.

Lubricator coding
(use with combo codes: A B)

L | N

Lub Type

Oil Mist Standard Sight Dome	L

Drain Type

No Drain; Closed End	N

Assembly configuration

W

Mounting

No Bracket	A
Port Blocks	C*
Port Blocks & Wall Brkt	D*
Wall Bracket	W

* For 3/8" Port Blocks please order separately. See Kits section.

Most Popular

Popular Combinations: Inlet pressure 145 psig (10 bar), secondary pressure 91.3 psig (6.3 bar), 14.5 psig (1 bar) pressure drop.

Filter + Regulator + Lubricator Combinations, poly bowl
5 micron element, 116 psig (8 bar) regulator + gauge and wall mounting brackets

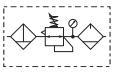

Port Size	Flow	Manual Drain	Auto Drain
1/4"	42 scfm (20 dm³/s, ANR)	**P32CB12GEMNGLNW**	**P32CB12GEANGLNW**
3/8"	68 scfm (32 dm³/s, ANR)	**P32CB13GEMNGLNW**	**P32CB13GEANGLNW**
1/2"	85 scfm (40 dm³/s, ANR)	**P32CB14GEMNGLNW**	**P32CB14GEANGLNW**

Filter/Regulator + Lubricator Combinations, poly bowl
5 micron element, 116 psig (8 bar) regulator + gauge and wall mounting brackets

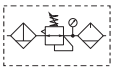

Port Size	Flow	Manual Drain	Auto Drain
1/4"	45 scfm (22 dm³/s, ANR)	**P32CA12GEMNGLNW**	**P32CA12GEANGLNW**
3/8"	70 scfm (33 dm³/s, ANR)	**P32CA13GEMNGLNW**	**P32CA13GEANGLNW**
1/2"	90 scfm (43 dm³/s, ANR)	**P32CA14GEMNGLNW**	**P32CA14GEANGLNW**

Ball Valve + Filter + Regulator + Lubricator Combinations, poly bowl
5 micron element, 116 psig (8 bar) regulator + gauge and wall mounting brackets

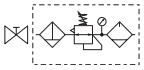

Port Size	Flow	Manual Drain	Auto Drain
3/8"	68 scfm (32 dm³/s, ANR)	**P32QB13GEMNGLNW**	**P32QB13GEANGLNW**
1/2"	85 scfm (40 dm³/s, ANR)	**P32QB14GEMNGLNW**	**P32QB14GEANGLNW**

Ball Valve + Filter/Regulator + Lubricator Combinations, poly bowl
5 micron element, 116 psig (8 bar) regulator + gauge and wall mounting brackets

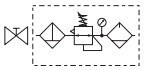

Port Size	Flow	Manual Drain	Auto Drain
3/8"	70 scfm (33 dm³/s, ANR)	**P32QA13GEMNGLNW**	**P32QA13GEANGLNW**
1/2"	90 scfm (43 dm³/s, ANR)	**P32QA14GEMNGLNW**	**P32QA14GEANGLNW**

All combo are without any mounting nut on regulator or filter regulator.

Use end port blocks to convert a 1/2 BSPP combo to an NPT version and to 1/4, 3/8.

P32 C B 1 4 G

Combination

B/V + Combination	**Q**
Combination + B/V	**X**
Combination	**C**

B/V = Ball valve

Combination Type*

F/R+L	**A**	F+Fc+Fa	**G**
F+R+L	**B**	F/R+Fc	**M**
F+Fc	**F**		

* Combination type
F = 5µ
Fc1 = 1µ
Fc = .01µ
Fa = Adsorber

‡ For polycarbonate bowl, see caution in Engineering Section A.

Thread Type

BSPP	**1**

Port Size

1/4	**2***
3/8	**3**
1/2	**4**

* Order combo Q or X: ball valve (BV) comes with 3/8 ports.

Bowl Type

Poly Bowl with Bowl Guard ‡	**G**
Metal Bowl without Sight Gauge	**M***
Metal Bowl With Sight Gauge	**S**

* Not available when using lubricator.
Note: All bowl types are the same for each component.
Example: If a "G" is specified for a F+L, both units would get a poly bowl with bowl guard.

Filter / Regulator coding
(use with codes: A M)

Filter coding
(use with combo codes: B F G). **For multiple filters, repeat as needed.**

E M

Element

0.01µ Element	**C**
0.01µ Element with dpi	**D**
5µ Element	**E**
1µ Element with dpi	**F***
1µ Element	**9**
5µ Element with dpi	**Q***
Adsorber	**A**

* Not available with F/R.

Drain Type

Auto Drain	**A**
Manual Drain	**M**

Regulator coding
(use with combo code: B)

N G

Relief / Adjustment

Non-Rising Knob Relieving	**N**

Adjustment Range
With Round Gauge

30 psig; 2 bar; 0.2 MPa	**Z**
60 psig; 4 bar; 0.4 MPa	**M**
125 psig; 8 bar; 0.8 MPa	**G**
250 psig; 17 bar; 1.7 MPa	**J**§

* Regulator comes with gauge respective to the adjustment range selected.
§ Not available with poly bowl with bowl guard.

Lubricator coding
(use with combo codes: A B)

L N

Lub Type

Oil Mist Standard Sight Dome	**L**

Drain Type

No Drain; Closed End	**N**

Assembly configuration

W

Mounting

No Bracket	**A**
Port Blocks	**C**
Port Blocks & Wall Brkt	**D**
Wall Bracket	**W**

Most Popular

Popular Combinations: Inlet pressure 145 psig (10 bar), secondary pressure 91.3 psig (6.3 bar), 14.5 psig (1 bar) pressure drop.

Filter + Regulator + Lubricator Combinations, poly bowl
5 micron element, 116 psig (8 bar) regulator + gauge and wall mounting brackets

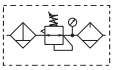

Port Size	Flow	Manual Drain	Auto Drain
1/2"	90 scfm (43 dm³/s, ANR)	**P33CB14GEMNGLNW**	**P33CB14GEANGLNW**
3/4"	110 scfm (52 dm³/s, ANR)	**P33CB16GEMNGLNW**	**P33CB16GEANGLNW**

Filter/Regulator + Lubricator Combinations, poly bowl
5 micron element, 116 psig (8 bar) regulator + gauge and wall mounting brackets

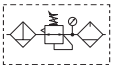

Port Size	Flow	Manual Drain	Auto Drain
1/2"	110 scfm (52 dm³/s, ANR)	**P33CA14GEMNGLNW**	**P33CA14GEANGLNW**
3/4"	150 scfm (71 dm³/s, ANR)	**P33CA16GEMNGLNW**	**P33CA16GEANGLNW**

Ball Valve + Filter + Regulator + Lubricator Combinations, poly bowl
5 micron element, 116 psig (8 bar) regulator + gauge and wall mounting brackets

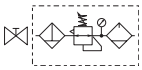

Port Size	Flow	Manual Drain	Auto Drain
1/2"	90 scfm (43 dm³/s, ANR)	**P33QB14GEMNGLNW**	**P33QB14GEANGLNW**
3/4"	110 scfm (52 dm³/s, ANR)	**P33QB16GEMNGLNW**	**P33QB16GEANGLNW**

Ball Valve + Filter/Regulator + Lubricator Combinations, poly bowl
5 micron element, 116 psig (8 bar) regulator + gauge and wall mounting brackets

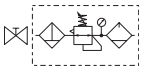

Port Size	Flow	Manual Drain	Auto Drain
1/2"	110 scfm (52 dm³/s, ANR)	**P33QA14GEMNGLNW**	**P33QA14GEANGLNW**
3/4"	150 scfm (71 dm³/s, ANR)	**P33QA16GEMNGLNW**	**P33QA16GEANGLNW**

All combo are without any mounting nut on regulator or filter regulator.

Use end port blocks to convert a 3/4 BSPP combo to an NPT version and to 1/2.

Filter / Regulator coding (use with codes: A M)

P33 C B 1 6 G

Combination

B/V + Combination	Q
Combination + B/V	X
Combination	C

B/V = Ball valve

Thread Type

BSPP	1

Port Size

1/2	4
3/4	6

Combination Type*

F/R+L	A	F+Fc+Fa	G
F+R+L	B	F/R+Fc	M
F+Fc	F		

* Combination type
F = 5µ
Fc1 = 1µ
Fc = .01µ
Fa = Adsorber

Bowl Type ‡

Poly Bowl With Bowl Guard	G
Metal Bowl Without Sight Gauge	M*
Metal Bowl With Sight Gauge	S

‡ For polycarbonate bowl, see caution in Engineering Section A.

* Not available when using lubricator.

Note: All bowl types are the same for each component.

Example: If a "G" is specified for a F+L, both units would get a poly bowl with bowl guard.

Filter coding (use with combo codes: B F G). **For multiple filters, repeat as needed.**

E M

Element

0.01µ Element	C
0.01µ Element with dpi	D*
5µ Element	E
1µ Element with dpi	F*
1µ Element	9
5µ Element with dpi	Q*
Adsorber	A

* Not available with F/R.

Drain Type

Auto Drain	A
Manual Drain	M

Regulator coding (use with combo code: B)

N G

Relief / Adjustment

Non-Rising Knob Relieving	N

Adjustment Range

With Round Gauge

30 psig; 2 bar; 0.2 MPa	Z
60 psig; 4 bar; 0.4 MPa	M
125 psig; 8 bar; 0.8 MPa	G
250 psig; 17 bar; 1.7 MPa	J*

* Not available with poly bowl with bowl guard.

Lubricator coding (use with combo codes: A B)

L N

Lub Type

Oil Mist Standard Sight Dome	L

Drain Type

No Drain; Closed End	N

Assembly configuration

W

Mounting

No Bracket	A
Port Blocks	C
Port Blocks & Wall Brkt	D
Wall Bracket	W

Most Popular

Popular Combination Dimensions mm (inches)

P31C

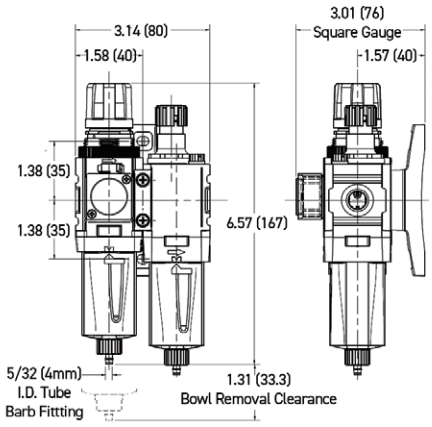

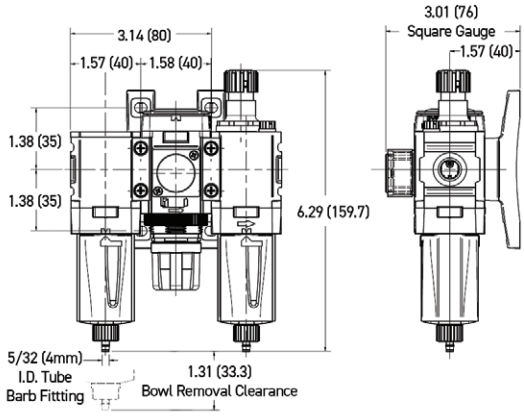

P32C

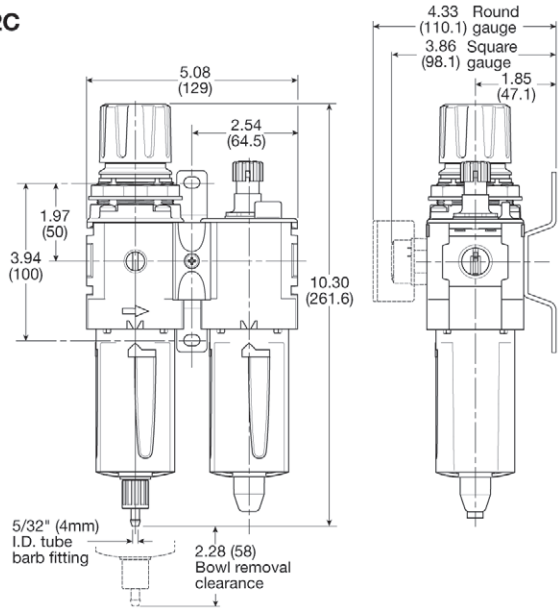

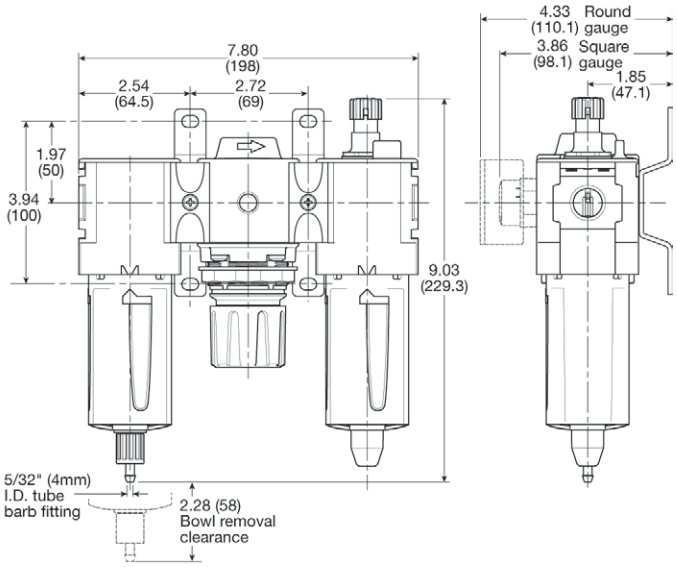

P33C

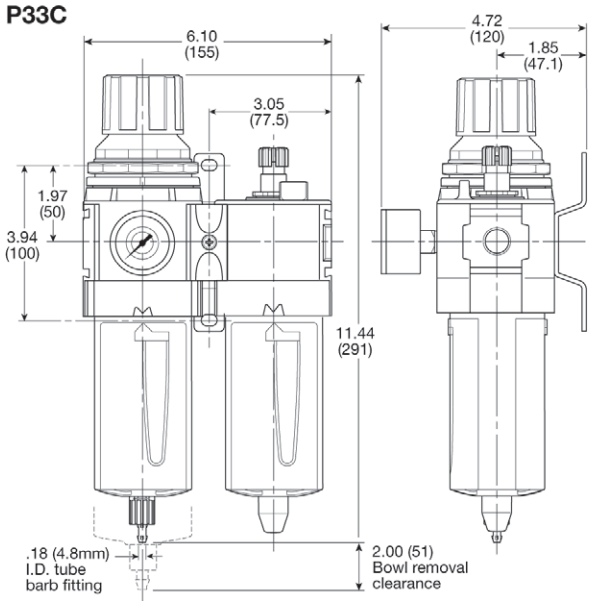

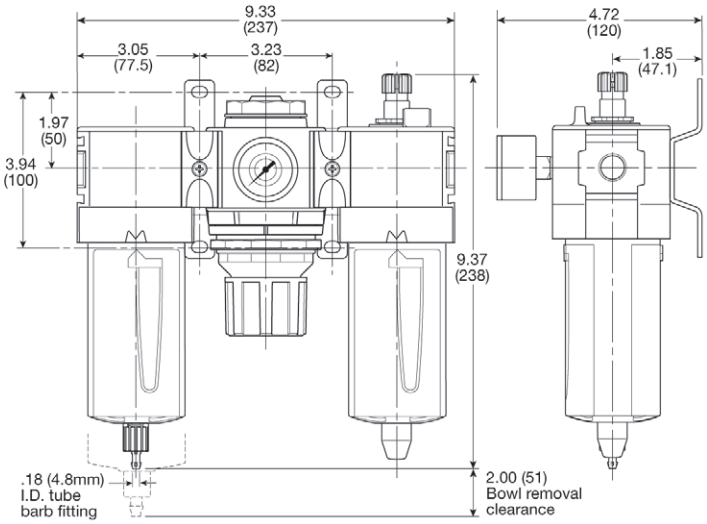

P31D & P32D Dump Valves

- Modular design with 1/4" or 1/2" integral ports (NPT & BSPP)
- The 3-way, 2-position function automatically dumps downstream pressure on the loss of pilot signal
- Solenoid or air pilot options
- High flow & exhaust capability
- Silencer included

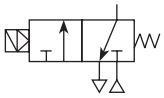

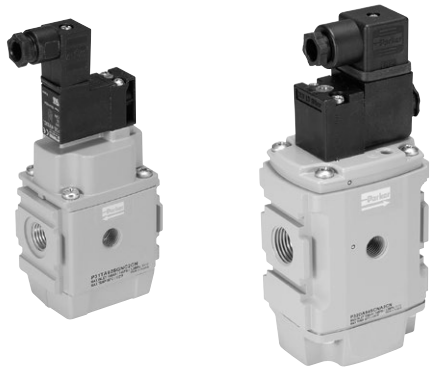

Remotely operated dump valves automatically shut off upstream pressure and exhaust the downstream pressure when the pilot pressure is released.

To maintain these units in the open position a pilot supply to the air pilot operated version or an electrical signal to the solenoid operated version must be maintained.

The valve will automatically dump when the holding signal is removed.

Port Size	Description	Weight lbs (kg)	Part Number
1/4"	120VAC Solenoid & cable plug	0.8 (0.37)	**P31DA12SGNC1FN**
1/4"	24VDC Solenoid & cable plug ‡	0.9 (0.41)	**P31DA12SGNC2CN**
1/2"	120VAC 30mm coil & cable plug incl. ‡	1.5 (0.69)	**P32DA14SCNA3GN**
1/2"	24VDC 30mm coil & cable plug incl. ‡	2.0 (0.91)	**P32DA14SCNA2CN**
1/2"	External air pilot operated ‡	1.9 (0.87)	**P32DA14PPN**

‡ Includes exhaust silencer

Operating Information

Flow capacity*:	P31D	36 scfm (17 dm³/s, ANR)
	P32D	108 scfm (51 dm³/s, ANR)
Temperature range (max)†:		
Solenoid operated		14°F to 122°F (-10°C to 50°C)
Air pilot operated		-4°F to 176°F (-20°C to 80°C)
Pressure (max):		
Solenoid operated		150 psig (10 bar)
Air pilot operated		250 psig (17 bar)
Operating pressure (min):		44 psig (3 bar)
Fluid:		Compressed air
Ports:	Air pilot	1/8
	Exhaust	P31D - 1/4; P32D - 1/2
	Gauge	P31D - 1/8; P32D - 1/4

* Inlet pressure 91.3 psig (6.3 bar), inlet pressure and 14.5 psig (1 bar) pressure drop.

† Air supply must be dry enough to avoid ice formation at temperatures below 35.6°F (2°C). Snap pressure: Full flow when downstream pressure reaches 50% of the inlet pressure.

Ordering Information:

P31DA 1 2 S G N — Solenoid type only: **C 2CN**

Body Size

Dump Valve (1/4")	P31DA
Dump Valve (1/2")	P32DA

Thread Type

BSPP	1
NPT	9

Port Size

Global Modular Mini (1/4")	2
Global Modular Compact (1/2")	4

Pilot Type

P	External Air Pilot
S	Solenoid Pilot

No external air pilot option for P31.

Actuator Interface

G	15mm Solenoid (P31 only)
C	30mm Solenoid
P	Threaded Air Pilot

Solenoid Type

C	15mm (P31 series only)
A	30mm CNOMO Coil (P32 only)
D	30mm CNOMO Coil (M12 connection) (P32 only)

Solenoid Voltage

2CN	24VDC Non Locking Manual Override
3GN	120VAC Non Locking Manual Override
1FN	120VAC Non Locking Manual Override (P31 series only)

Note:
P32 unit used for both P32 & P33 series

Most Popular

Material Specifications

Body	Aluminum
Body cover	Polyester
Seals	Nitrile NBR

Flow Charts

P31DA 1/4" Remote Dump Valve

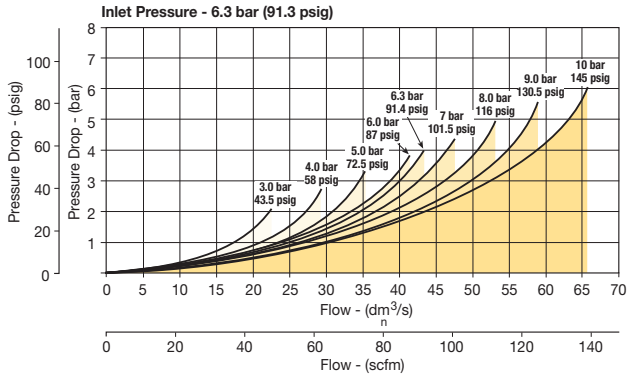

P32DA 1/2" Remote Dump Valve

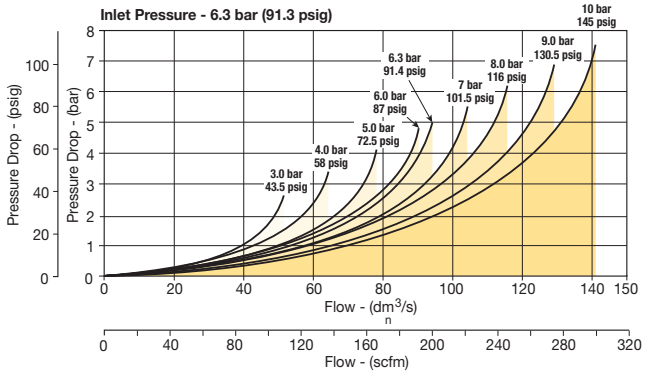

Dimensions mm (inches)

P31D

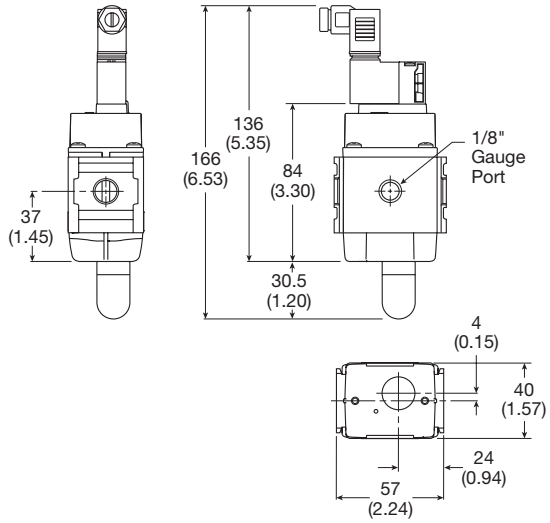

P32D

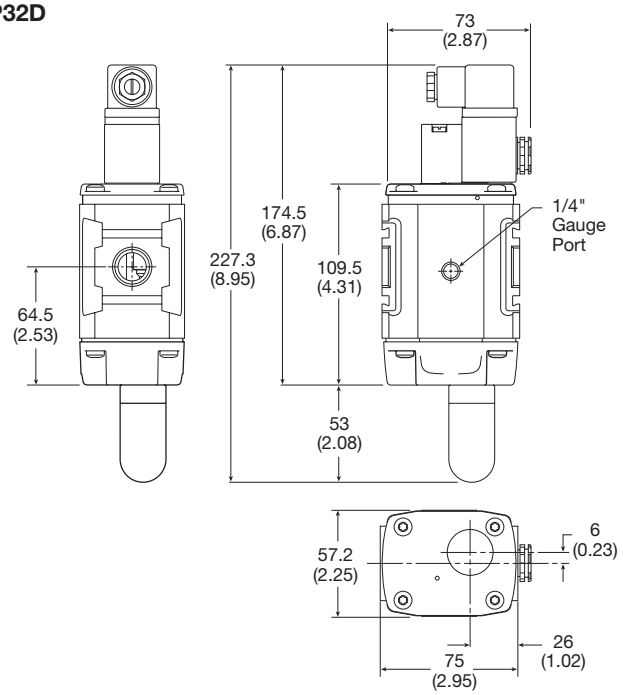

Most Popular

P31S & P32S Soft Start Valves

- Modular design with 1/4" or 1/2" integral ports (NPT & BSPP)
- The 2-way, 2-position function provides for the safe introduction of pressure
- Adjustable slow start
- Solenoid or air pilot options
- High flow

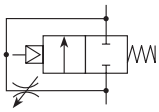

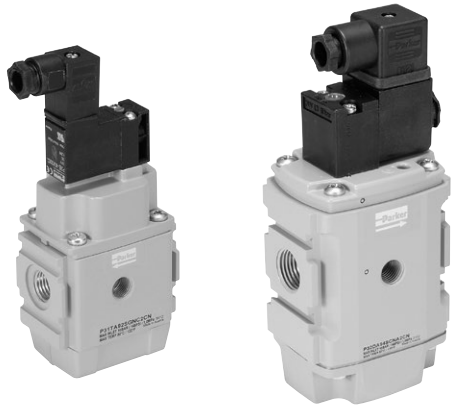

Parker Global Series Soft Start Valves, provide for the safe introduction of pressure to machines or systems. Soft Start Valves, allow the pressure to gradually build to the set point before fully opening to deliver full flow at line pressure.

The controlled introduction of pressure can be an important safety factor and prevent damage to tooling when air pressure is introduced at machine or system start up.

Note: Soft Start Valves must be installed downstream of a 3/2 valve with exhaust capability

Port Size	Description	Weight Lbs (Kg)	Part Number
1/4"	120VAC Solenoid & Cable Plug	0.8 (0.37)	**P31SA12SGNC1FN**
1/4"	24VDC Solenoid & cable plug	0.9 (0.41)	**P31TA12SGNC2CN**
1/2"	120VAC 30mm Coil & Cable Plug incl.	1.5 (0.87)	**P32SA14SCNA3GN**
1/2"	24VDC 30mm Coil & Cable Plug	2.0 (0.90)	**P32SA14SCNA2CN**
1/2"	Internal Air Pilot Operated	2.0 (0.90)	**P32SA14Y0N**
1/2"	External Air Pilot (1/8 threaded)	1.5 (0.87)	**P32SA14PPN**

Operating Information

Flow capacity*:	P31S	36 scfm (17 dm³/s, ANR)
	P32S	101 scfm (48 dm³/s, ANR)
Temperature range (max)†:		
Solenoid operated		14°F to 122°F (-10°C to 50°C)
Air pilot operated		-4°F to 176°F (-20°C to 80°C)
Pressure (max):		
Solenoid operated		150 psig (10 bar)
Air pilot operated		250 psig (17 bar)
Operating pressure (min):		44 psig (3 bar)
Fluid:		Compressed air
Ports:	Air pilot	1/8
	Gauge	P31S - 1/8; P32S - 1/4

* Inlet pressure 91.3 psig (6.3 bar), inlet pressure and 14.5 psig (1 bar) pressure drop.

† Air supply must be dry enough to avoid ice formation at temperatures below 35.6°F (2°C). Snap pressure: Full flow when downstream pressure reaches 50% of the inlet pressure.

Ordering Information:

P31SA 1 2 S G N — **C 2CN** (Solenoid type only)

Body Size

Soft Start	P31SA
Soft Start	P32SA

Thread Type

BSPP	1
NPT	9

Port Size

Global Modular Mini (1/4")	2
Global Modular Compact (1/2")	4

Pilot Type

P	External Air Pilot
S	Solenoid Pilot
Y	Internal Air Pilot

Note: No external air pilot option for P31.

Actuator Interface

0	Internal Pilot
G	15mm Solenoid (P31 Only)
C	30mm Solenoid
P	Threaded Air Pilot

Solenoid Type

C	15mm (P31 series only)
A	30mm CNOMO Coil (P32 only)
D	30mm CNOMO Coil (M12 connection) (P32 only)

Solenoid Voltage

2CN	24VDC Non Locking Manual Override
3GN	120VAC Non Locking Manual Override
1FN	120VAC Non Locking Manual Override (P31 series only)

Note:
P32 unit used for both P32 & P33 series

Most Popular

Material Specifications

Body	Aluminum
Body cover	Polyester
Seals	Nitrile NBR

Flow Charts

P31SA 1/4" Soft Start Valve

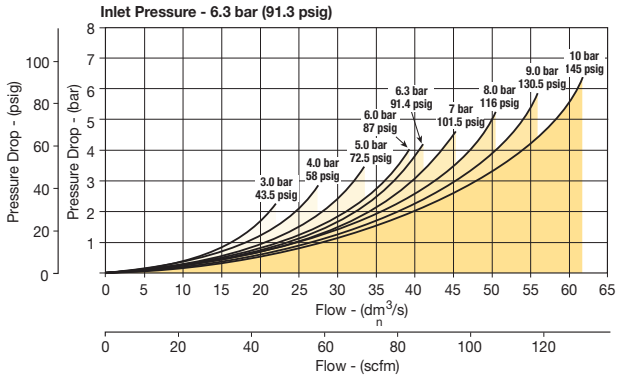

P32SA 1/2" Soft Start Valve

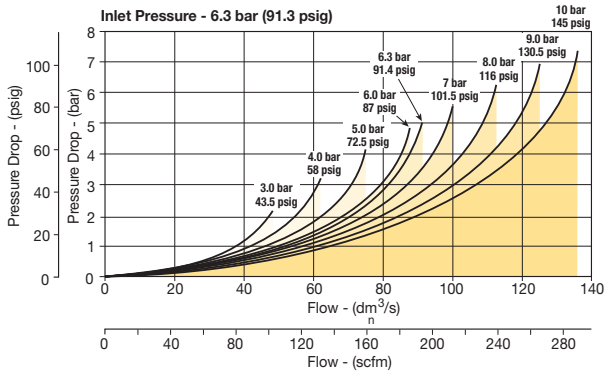

Dimensions mm (inches)

P31S

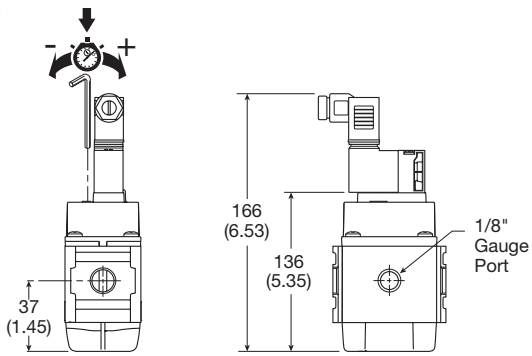

Soft Start Function:

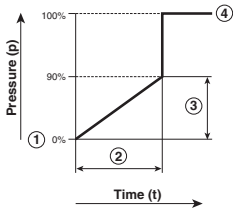

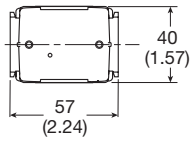

① Start signal
② Switching time delay
③ Gradual pressure build up
④ Operating pressure p^2 (=p^1)

P32S

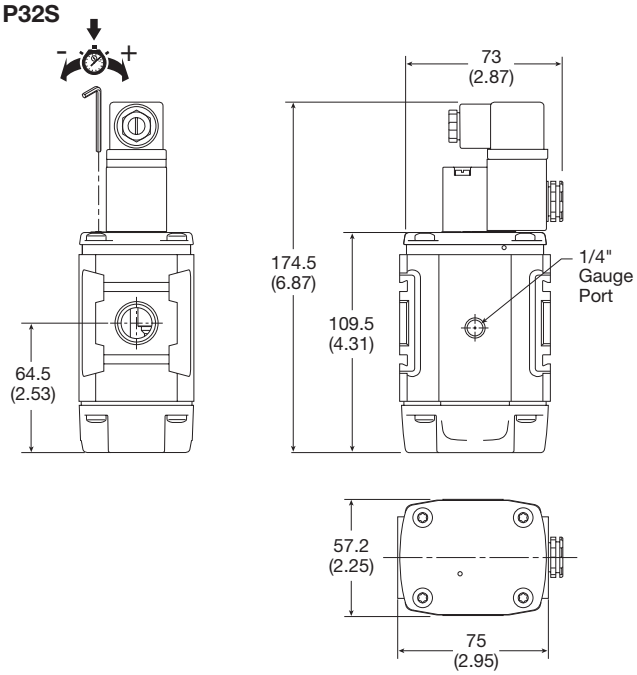

Most Popular

P31T & P32T Combined Soft Start / Dump Valves

- Modular design with 1/4" or 1/2" integral ports (NPT & BSPP)
- Provides for the safe introduction of pressure
- The 3-way, 2-position function automatically dumps downstream pressure on the loss of pilot signal
- Adjustable slow start
- Solenoid or air pilot options
- High flow & exhaust capability
- Silencer included

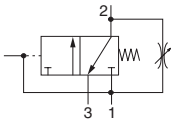

Parker Global Series Combined Soft Start / Dump Valves, provide for the safe introduction of pressure to machines or systems. Soft Start / Dump Valves when set, allow the pressure to gradually build to the set point before fully opening to deliver full flow at line pressure.

The controlled introduction of pressure can be an important safety factor and prevent damage to tooling when air pressure is introduced at machine or system start up.

To maintain these units in the open position a pilot supply to the air pilot operated version or an electrical signal to the solenoid operated version must be maintained. The valve will automatically dump when the holding signal is removed.

Port Size	Description	Weight lbs (kg)	Part Number
1/4"	120VAC Solenoid & cable plug	0.8 (0.37)	**P31TA12SGNC1FN**
1/4"	24VDC Solenoid & cable plug	0.9 (0.41)	**P31TA12SGNC2CN**
1/2"	120VAC 30mm coil & cable plug incl.	1.9 (0.87)	**P32TA14SCNA3GN**
1/2"	24VDC 30mm coil & cable plug incl.	2.0 (0.91)	**P32TA14SCNA2CN**
1/2"	External air pilot operated	1.9 (0.87)	**P32TA14PPN**

Operating Information

Flow capacity*:	P31T	36 scfm (17 dm^3/s, ANR)
	P32T	97 scfm (46 dm^3/s, ANR)
Temperature range (max)†:		
Solenoid operated		14°F to 122°F (-10°C to 50°C)
Air pilot operated		-4°F to 176°F (-20°C to 80°C)
Pressure (max):		
Solenoid operated		150 psig (10 bar)
Air pilot operated		250 psig (17 bar)
Operating pressure (min):		44 psig (3 bar)
Fluid:		Compressed air
Ports:	Air pilot	1/8
	Exhaust	P31T - 1/4; P32T - 1/2
	Gauge	P31T - 1/8; P32T - 1/4

* Inlet pressure 91.3 psig (6.3 bar), inlet pressure and 14.5 psig (1 bar) pressure drop.

† Air supply must be dry enough to avoid ice formation at temperatures below 35.6°F (2°C). Snap pressure: Full flow when downstream pressure reaches 50% of the inlet pressure.

Ordering Information:

P31TA 1 2 S G N — **C 2CN**

Solenoid type only

Body Size

Soft Start / Dump Valve (1/4")	P31TA
Soft Start / Dump Valve (1/2")	P32TA

Thread Type

BSPP	1
NPT	9

Port Size

Global Modular Mini (1/4")	2
Global Modular Compact (1/2")	4

Pilot Type

P	External Air Pilot
S	Solenoid Pilot

Note: No external air pilot option for P31.

Actuator Interface

G	15mm Solenoid (P31 only)
C	30mm Solenoid
P	Threaded Air Pilot

Solenoid Type

C	15mm (P31 series only)
A	30mm CNOMO Coil (P32 only)
D	30mm CNOMO Coil (M12 connection) (P32 only)

Solenoid Voltage

2CN	24VDC Non Locking Manual Override
3GN	120VAC Non Locking Manual Override
1FN	120VAC Non Locking Manual Override (P31 series only)

Note:
P32 unit used for both P32 & P33 series

Most Popular

Material Specifications

Body	Aluminum
Body cover	Polyester
Seals	Nitrile NBR

Flow Charts

P31TA 1/4" Soft Start & Dump Valve

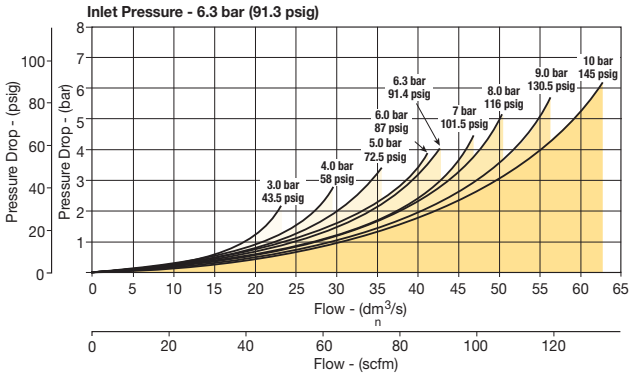

P32TA 1/2" Soft Start & Dump Valve

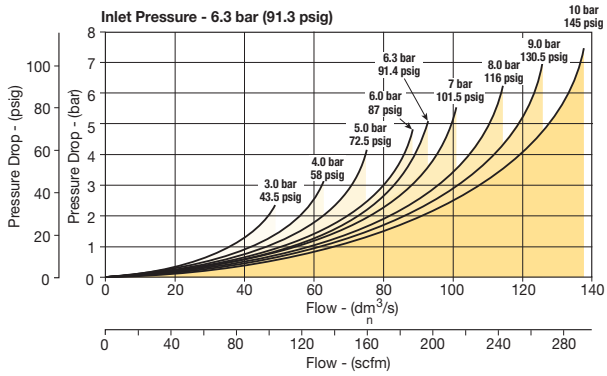

Dimensions mm (inches)

P31T

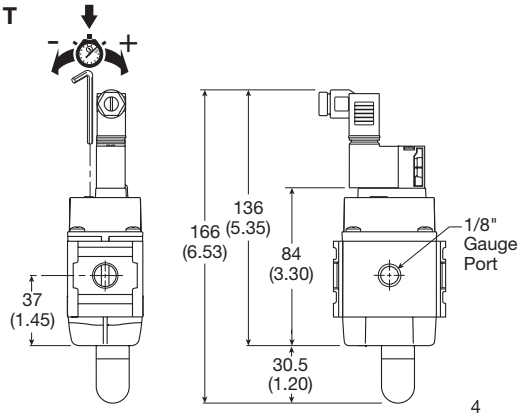

Soft Start Function:

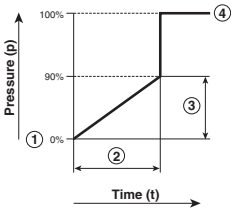

① Start signal
② Switching time delay
③ Gradual pressure build up
④ Operating pressure p^2 (=p^1)

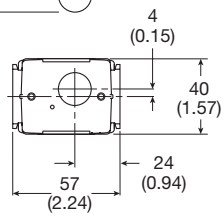

P32T

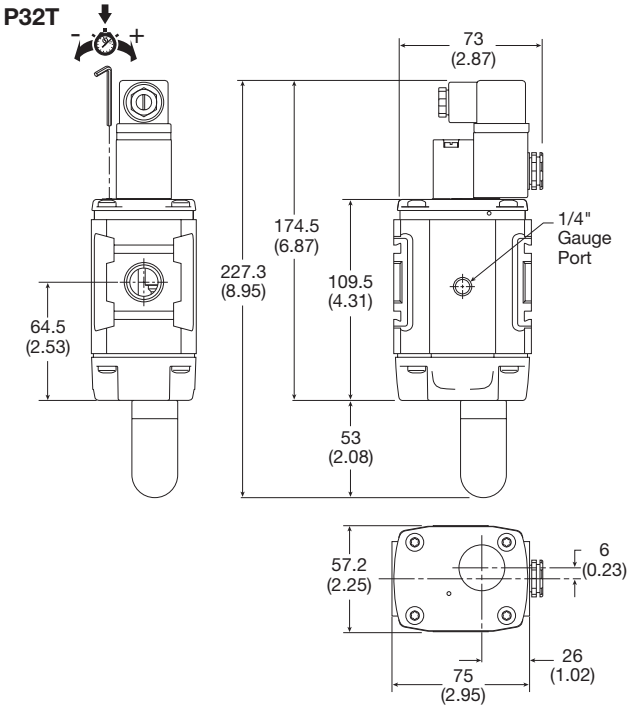

Most Popular

P33D & P33T Safety Exhaust Valves

- Easy electrical interface with M12 connectors to safety circuit
- External monitoring provides a cost and space saving advantage
- Solid state pressure sensors provide accurate, fast fault detection
- Quick visual LED indicators on the front of the valve
- Superior seated seal design for longer life
- Safety exhaust outlet is no-maintenance and non-clog by design
- Suitable for stand alone use or modular mounting to P32 or P33 FRL assembly
- High B10 life value
- Fast exhaust times allow for smaller machine footprint

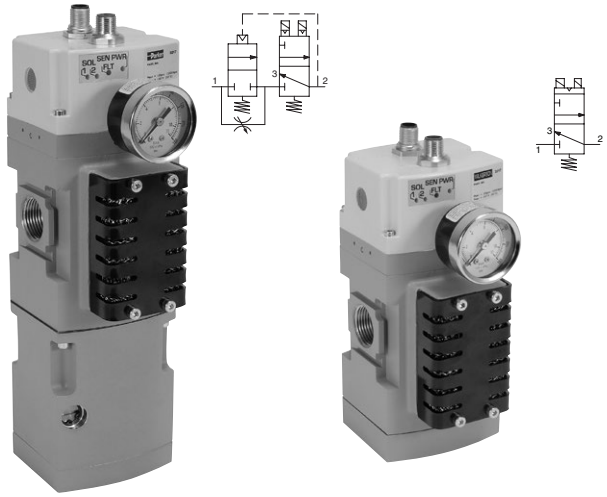

(optional soft start)

Operating Information

Operating pressure:	30 to 150 PSIG (2 to 10 bar)
Minimum operating pressure:	30 PSIG (2 bar)
Ambient temperature:	40° to 120°F (4° to 50°C)
Recommended filtration:	40µ
Operating medium:	Compressed air
Ingress protection class:	IP65
B10 (mio):	10 million switching cycles
B10 d (mio):	20 million switching cycles
Allowable discordance:	50ms
Flow media:	Compresses air to ISO 8573-1 Class 7:4:4
Weight lbs (kg):	6.5 (2.9) with soft start 4.2 (1.9) without soft start

The soft start opens to full flow at approximately 60% of input pressure.

Note:
P33*B16AAEN as general use for relay
P33*B16ABEN uses with Rockwell
P33*B16CAEN uses with Siemens
P33*B16CCEN uses with Siemens
P33*B16DCEN uses with Rockwell & Turck

Ordering Information:

P3	3	T	B	1	6	A	B	E	N

Series

Standard	P3

Global

Standard	3

Type

Safety Redundant (no soft start)	D
Safety Redundant (c/w soft start)	T

Design

Current	B

Thread Type

BSPP	1

Port Size

3/4" [1]	6

Output for Solenoid, M12 Connector Pin

2 & 4, Common 3	A
3 & 4	C
2 & 4	D

Output for Sensors, M12 Connector Pin

1 & 2, 1 & 4, Common 3	A
1 & 2, 5 & 4, Common 3	B
5 & 2, 1 & 4, Common 3	C

Sensor Monitoring

External	E

Gauge [2]

No Gauge	N

Notes:
1. For 1/2" connections use 1/2" port blocks on standard 3/4" housing.
2. Safety valve supplied with 1/8" gauge port.

Most Popular

General Technical Data

Valve type	Externally monitored, redundant, dual poppet
Soft start	Optional
Valve function	3/2 way, normally closed
Housing material	Cast aluminum
Seals	NBR
Fasteners	Stainless steel / brass
Silencer	Steel, non clog safety design

Electrical Specifications

Operating voltage	24V DC
Electrical connection	Two M12 connectors
Switching time 1-2 (ms)	23.3
Switching time 2-3 (ms)	42.7
Duty cycle (%)	100 %
Operating voltage (DC)	21.6 to 26.4
Nominal power	
per solenoid coil at 24V DC (W) +/- 10%	2 W
per pressure sensor at 24V DC	0.55 W

In accordance with EN ISO 13849-1 this safety valve is suitable for use up to Category 4, Ple, sil 3. Certified to cCSAus and bears the CE mark.

A product Integration Guide is available to help connect your logic controller to the Parker Safety Exhaust Valve under the Product Support tab at www.parker.com/pdn/safetyvalve

Mounting Hardware

Body Connector		**P32KA00CB**
T-Bracket w / Body Connector		**P32KA00MT**
T-Bracket (fits to body connector or port block)		**P32KA00MB**
Port Block Kits (includes two)	1/2" NPT	**P32KA94CP**
	1/2" BSPP	**P32KA14CP**
	3/4" NPT	**P32KA96CP**
	3/4" BSPP	**P32KA16CP**

Solenoid M12 Pinouts

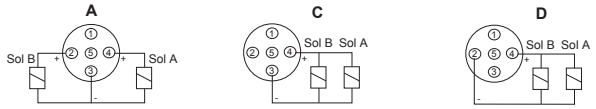

Pressure Sensor M12 Pinouts

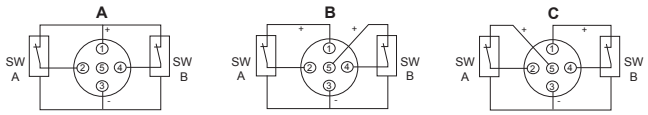

Externally Monitored (with Soft Start)

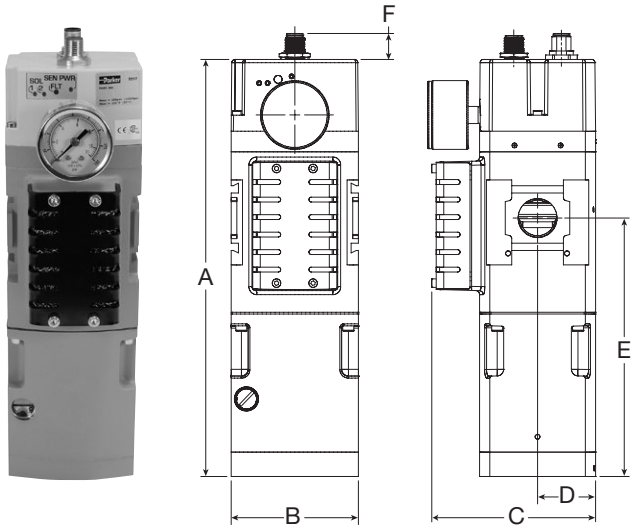

Externally Monitored (No Soft Start)

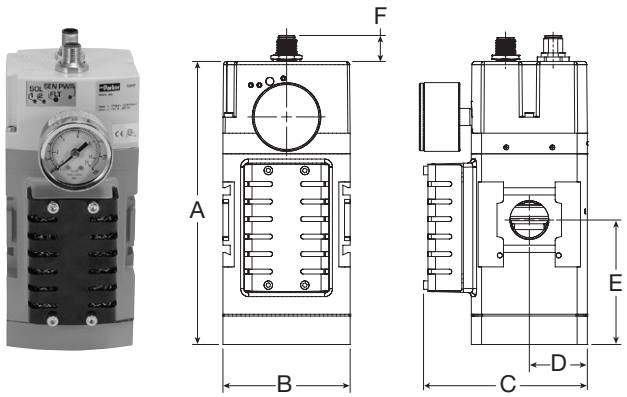

Dimensions inches (mm)

	Ports	Standard nominal flow rate 1 → 2 L/min (SCFM)*	2 → 3 L/min (SCFM)*	A	B	C	D	E	F
Externally Monitored with soft start	3/4"	4,100 (145)	7,500 (265)	10.31 (261.9)	3.15 (80)	4.30 (109.3)	1.44 (36.5)	6.39 (162.3)	0.64 (16.3)
Externally Monitored no soft start	3/4"	4,300 (152)	7,500 (265)	7.03 (178.7)	3.15 (80)	4.30 (109.3)	1.44 (36.5)	3.11 (79.0)	0.64 (16.3)

* Standard nominal flow rate is based on 6 bar input pressure with ΔP = 1 bar

Most Popular

Safety Exhaust Valve Function

When applications demand a safe environment you can count on safety valves from Parker Hannifin. The P33 family of safety exhaust valves are 3/2 normally closed valves designed to rapidly exhaust compressed air in the event of a fault condition and to provided monitored coverage ensuring safe function. The P33 is available in two distinct styles, internally* or externally monitored. The valve is suitable for use up to Category 4, performance level e. Monitoring is achieved externally via a two channel system connected to a safety interface device. Both valves are available with an adjustable soft start and high flow exhaust to shut your equipment down faster when needed. LED's provide clear status of main solenoid operation, sensor power and fault condition for quick visual reference.

Externally Monitored Valve, Faults and Resets

The externally monitored valve has the monitoring done via a PLC or relay which offers a size and cost advantage over internally monitored valves. The integration of a safety interface into the PLC or relay will help determined the achievable category and performance level of the control system. Customers are required to provide the logic function via the safety device. The valve will lock-out to the "safe state" if asynchronous movement of the valve elements occur which will be detected by solid state pressure sensors. To achieve the proper safety rating, the safety PLC or relay must monitor the solid state pressure sensors to ensure they are not in different states for more than 150ms. If the sensors are in different states for longer than 150ms then the programming logic must shut off power to the solenoids and consider it a fault condition. If during operation the externally monitored P33 enters a fault condition the valve will shut off. A separate reset signal must be incorporated into the logic sequence to avoid automatic restart of the valve. The safety exhaust valves are not for use with clutch or brake applications and are designed for use in conjunction with a safety relay or safety PLC for safe monitoring and fault detection.

Achieving Desired Performance Level **

The category and performance level (PLr) needed for your machine is determined by a risk assessment of the machinery design and application based on EN ISO 13849-1. The Parker P33 safety valve is designed for those applications requiring a PL of d or e. Please note these levels require other aspects of the system to meet these requirements. As a guide: you can achieve a Cat 4 PL e system by integrating monitoring via a programmable safety rated device. Because the P33 is a mechanical fail-safe device, the monitoring could also be done via a standard PLC and still attain as high as a PL d rating.

Cat 3, PL d

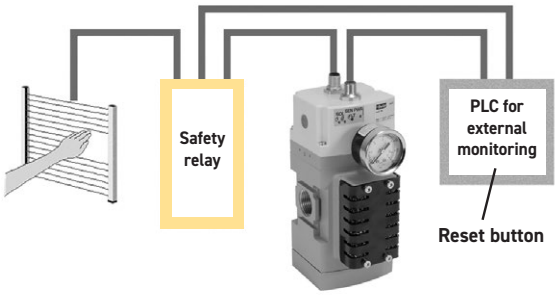

Cat 4, PL e

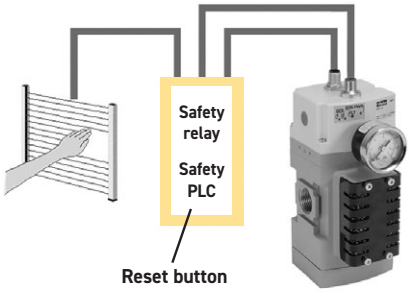

* For information on internally monitored safety valves reference Bulletin 0700-B13.

** An integration guide is available to provide further information on connecting the safety valve product to achieve the desired performance level. Please consult Parker and the standard EN ISO 13849-1 for more information.

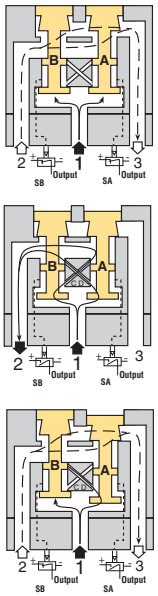

Conditions at Start

The Safety exhaust valve starts with inlet 1 closed to outlet 2 by both valve elements A and B. Outlet 2 is open to exhaust 3. Pressure signals at both sensors SA and SB are exhausted and contacts 1 and 2 of sensors SA and SB are connected. The normally closed sensors both provide voltage feedback signals to the external monitoring system.

Normal Operation

During normal operation the two solenoids are simultaneously energized which actuates both pilots and causes valve elements A and B to shift. Inlet 1 is then connected to outlet 2 via crossflow passages C and D. Exhaust 3 is closed. Sensing pressure signals go to each pressure sensor and become equal to inlet pressure. Both sensors contacts open and no voltage signals are provided to the external monitoring system. This indicates that both sides of the valve actuated as expected.

Detecting a Malfunction

A malfunction in the system or the valve itself could cause one valve element to be open and the other closed. Air then flows past the inlet poppet on valve element A, into crossflow passage D, but is substantially blocked by the spool portion of element B. The large size of the open exhaust passage past element B keeps the pressure at the outlet port below 2% of inlet pressure. Full sensing air pressure from side A goes to sensor SA, and a reduced pressure goes to sensor SB. This full pressure signal causes SA to open. Sensor SB, with a reduced pressure signal, does not open. An external monitoring system can detect the malfunction by monitoring the outputs of the SA and SB sensors. The external monitor system must then react accordingly by shutting down the power to the valve solenoids and any other components deemed necessary to stop the machine.

Machinery Directive - Overview

The Machinery Directives' goal is to protect people and the environment from accidents caused from all types of machinery. Based on the standard EN 13849 [safety of machines; safety-related parts of control systems] these standards build the procedure to assess safety-related control systems.

Required Performance Level (PLr) based on a risk assessment are now commonly used to determine the safety level required for the controls system, for the application of machinery.

Performance Level (PL) based on the original B, 1,2,3,4 safety categories, diagnostic capabilities, Mean time to dangerous failure (MTTFd), and common cause failure (CCF), define safety levels of a given safety function. This ensures that safety is not just focused on component reliability, but instead introduces common sense safety principles such as redundancy, diversity, and fail-safe behavior of safety related control parts.

The new EN 13849 standards of the Machinery Directive dictates the machine is safe when the Performance Level of the safety control circuit is equal to or greater than the Required Performance Level of the application. When determining the required performance level, the greater the risk, the higher the requirements of the control system.

$$PLr < PL$$

Determining PLr According to EN 13849-1

The level of each hazardous situation is classified in five Performance levels from a to e. With PL a the control functions contribution to risk reduction is low, while at PL e it is high. The risk graph above can be used as a guideline to determine the required performance level PLr for safety function.

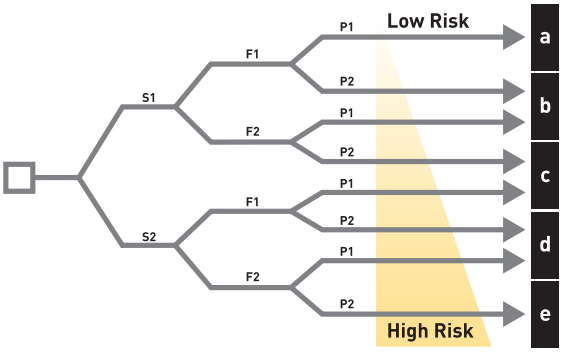

Risk Parameters

(S) Severity of injury

- **S1 Slight (normally reversible injury)**
- **S2 Serious (normally irreversible injury, or death)**

(F) Frequency and / or duration of exposure to hazard

- **F1 Seldom to less often and / or brief**
- **F2 Frequent to continuous and / or long**

(P) Possibility of avoiding the hazard

- **P1 Possibility of avoiding the hazard**
- **P2 Scarcely ever possible**

Determining PL According to EN 13849-1

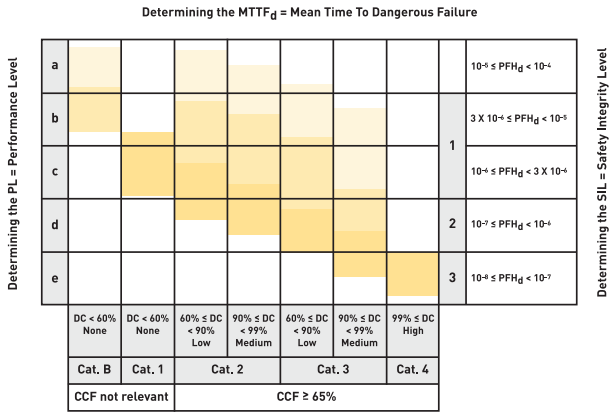

Categories Defined by EN 13849-1

Category	Summary
Category B	When a fault occurs it can lead to the loss of the safety function.
Category 1	Same that Category B, but loss of the safety function is less likely thanks to a good MTTFd of each channel.
Category 2	System behavior allow that the occurrence of a fault can lead to the loss of the safety function between the checks; the loss of the safety function is detected by the check.
Category 3	A single fault in any of safety related parts does not lead to the loss of the safety function. Whenever reasonably possible the single fault shall be detected at or before the next demand upon the safety function. (Means redundancy)
Category 4	Same as Category 3, but if detection of single fault is not possible on or before the next demand upon the safety, an accumulation of these undetected faults shall not lead to the loss of the safety function. (Means redundancy & check)

Ball Valves / Lockout Valves

The Ball / Lockout Valve shuts off downstream line pressure in the closed position with a 90° turn of the handle. In the closed position, inlet air pressure is blocked and downstream / system air is exhausted through a threaded port. To prevent unauthorized adjustment, the padlock slide may be assembled on either side. It is recommended that this slide is installed after final system assembly.

The Safety Lockout valves conform to OSHA #29 CFR part 1910 — control of hazardous energy source (lockout / tagout).

Note: This padlock slide is a permanent assembly and may not be removed later, any unauthorized tampering will void any warranty claims. The valve can only be locked in the closed position.

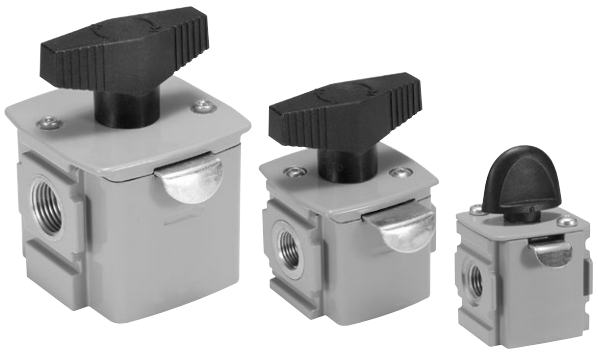

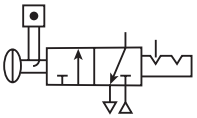

Ordering Information:

Model Type	Port Size	Exhaust Port	Flow scfm (dm^3/s, ANR)	Modular Ball Valve Flow from Left to Right
P31	1/4"	1/4"	42.4 (20)	**P31VB12LBNN**
P32	3/8"	1/4"	190.7 (90)	**P32VB13LBNN**
	1/2"	1/4"	258.5 (122)	**P32VB14LBNN**
P33	1/2"	1/2"	561.5 (265)	**P33VB14LBNN**
	3/4"	1/2"	678 (320)	**P33VB16LBNN**

* Lockout tab and muffler supplied with unit.

For thread type: NPT **9**

Operating Information

Operating temperature:		-40°C to 80°C (-40°F to 176°F)
Pressure supply (max):		250 psig (17 bar)
Port size: BSPP / NPT		1/4, 3/8, 1/2, 3/4
Weight:	P31	0.33 lbs (0.15 kg)
	P32	0.79 lbs (0.36 kg)
	P33	1.21 lbs (0.55 kg)

Material Specifications

Body	Aluminum
Seals	PTFE
Ball	Stainless Steel
Lockout Tab	Zinc Plated Steel
Screw	Zinc Plated Steel

Dimensions mm (inches)

P31

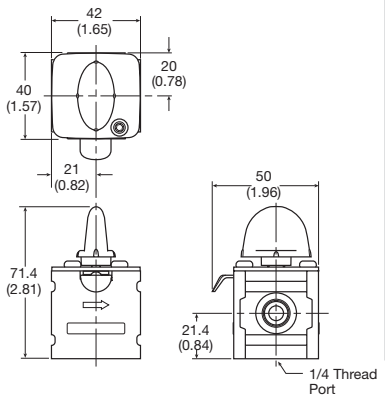

P32

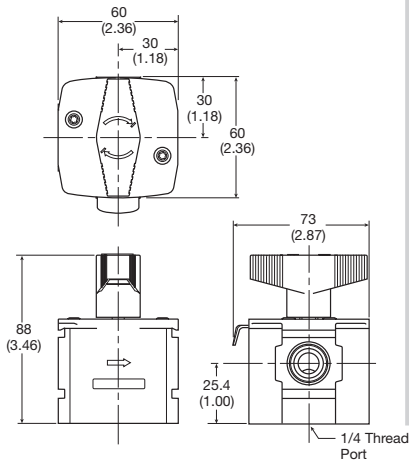

P33

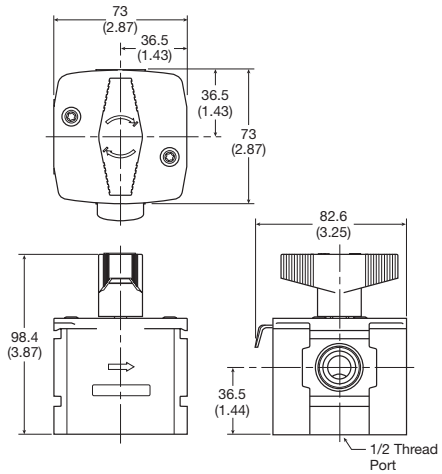

Most Popular

Manifold and Branch Blocks

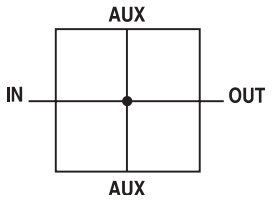

Features

- Available in 1/4, 1/2 & 3/4 threaded inlet / outlet ports
- Two additional top and bottom auxiliary ports standard
- Can be mounted anywhere in the FRL system
- Flow capacity: ¼ 66 dm3/s, ½ 189 dm3/s, ¾ 305 dm3/s

Manifold Blocks

Model Type	In / Out Port Size	Auxiliary Port Size Top	Auxilliary Port Size Bottom	Thread Type	Order Code
P31	1/4"	1/4"	1/4"	BSPP	**P31MA12022N**
P32	1/2"	1/4"	1/2"	BSPP	**P32MA14024N**
P33	3/4"	1/4"	1/2"	BSPP	**P33MA16024N**

For thread type: NPT **9**

Materials of Construction

Body	Aluminum

Specifications

Max Operating Temperature		65.5°C (150°F)
Max Supply Pressure		20.7 bar (300 psi)
Weight	P31:	0.19 kg (0.42 lbs)
	P32:	0.30 kg (0.66 lbs)
	P33:	0.34 kg (0.75 lbs)

Manifold Block - Dimensions

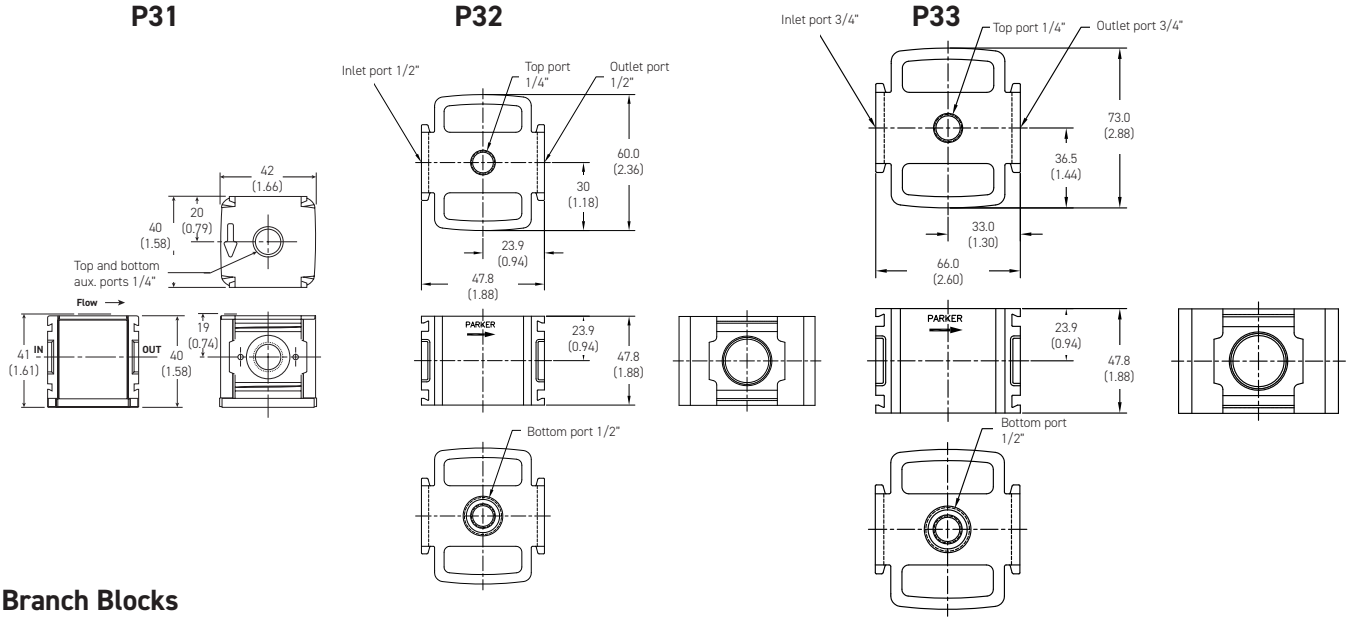

Branch Blocks

P32	1/2"	1/4"	1/4"	BSPP	**P32MD14022N**
P32	1/4"	1/4"	1/4"	BSPP	**P32MD12022N**

Materials of Construction

Body	Aluminum

Specifications

Max Operating Temperature	65.5°C (150°F)
Max Supply Pressure	20.7 bar (300 psi)
Weight	0.14 kg (0.31 lbs)

Flow Capacity

1/4"	66 dm³/s (140 scfm)
1/2"	189 dm³/s (400 scfm)
3/4"	305 dm³/s (646 scfm)

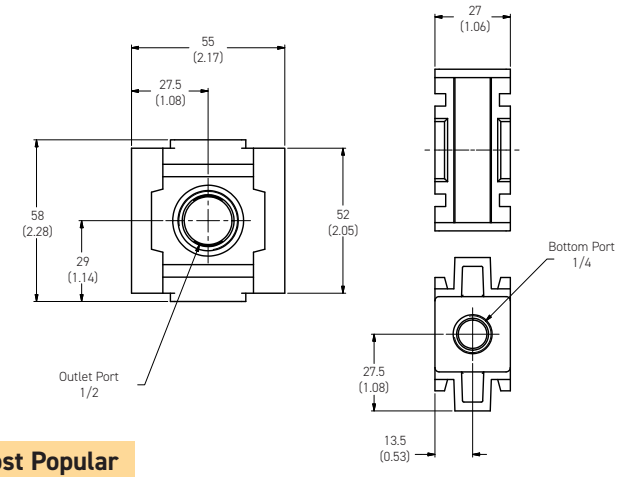

Most Popular

P31 Accessories

C-Bracket
(Fits to filter and lubricator body)

P31KA00MW

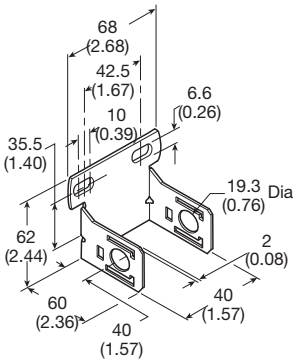

T-Bracket w/ Body Connector
(O-ring not shown)

P31KA00MT

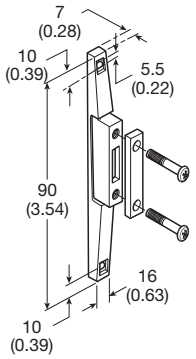

Body Connector
(O-ring not shown)

P31KA00CB

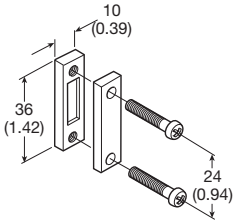

Port Block Kit
(O-ring not shown)

1/8 NPT	**P31KA91CP**	1/8 BSPT	**P31KA21CP**
1/4 NPT	**P31KA92CP**	1/4 BSPT	**P31KA22CP**
3/8 NPT	**P31KA93CP**	3/8 BSPT	**P31KA23CP**
1/8 BSPP	**P31KA11CP**		
1/4 BSPP	**P31KA12CP**		
3/8 BSPP	**P31KA13CP**		

Port Block Kit w/ T-Bracket
(O-ring not shown)

1/8 NPT	**P31KA91CN**	1/8 BSPT	**P31KA21CN**
1/4 NPT	**P31KA92CN**	1/4 BSPT	**P31KA22CN**
3/8 NPT	**P31KA93CN**	3/8 BSPT	**P31KA23CN**
1/8 BSPP	**P31KA11CN**		
1/4 BSPP	**P31KA12CN**		
3/8 BSPP	**P31KA13CN**		

Angle Bracket
(Fits to regulator and filter/regulator body)

P31KB00MR

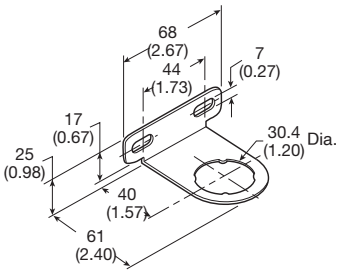

Most Popular

P32 Accessories

T-Bracket w/ Body Connector

P32KA00MT

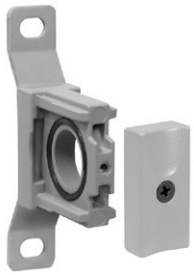

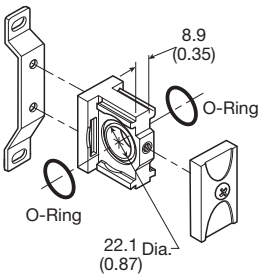

Body Connector

P32KA00CB

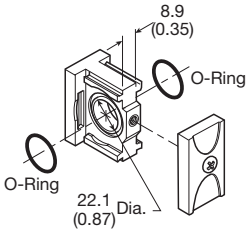

Port Block Kit

1/4 NPT	**P32KA92CP**	1/4 BSPT	**P32KA22CP**
3/8 NPT	**P32KA93CP**	3/8 BSPT	**P32KA23CP**
1/2 NPT	**P32KA94CP**	1/2 BSPT	**P32KA24CP**
3/4 NPT	**P32KA96CP**	3/4 BSPT	**P32KA26CP**
1/4 BSPP	**P32KA12CP**		
3/8 BSPP	**P32KA13CP**		
1/2 BSPP	**P32KA14CP**		
3/4 BSPP	**P32KA16CP**		

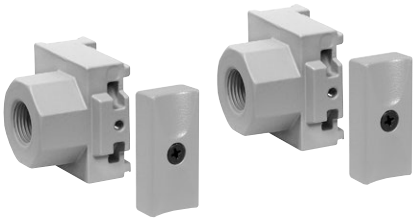

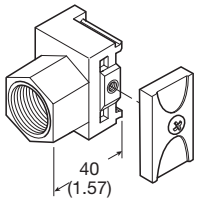

Angle Bracket

(Fits to regulator and filter/regulator bonnet)

P32KB00MR

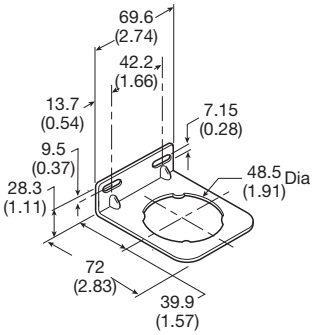

L-Bracket

(Fits to filter and lubricator body)

P32KA00ML

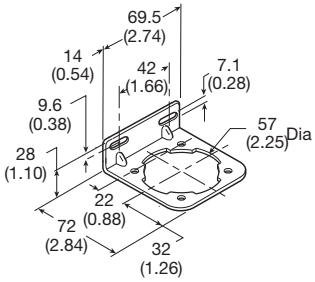

T-Bracket

(fits to body connector or port block)

P32KA00MB

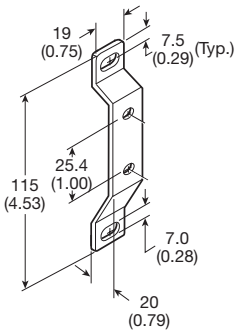

Most Popular

P33 Accessories

T-Bracket w/ Body Connector

P32KA00MT

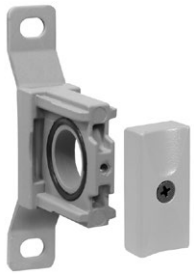

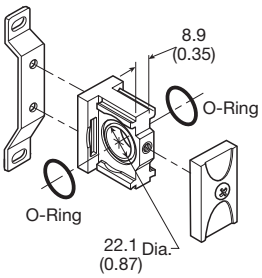

Body Connector

P32KA00CB

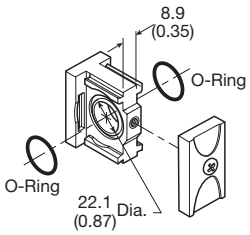

Port Block Kit

1/4 NPT	**P32KA92CP**	1/4 BSPT	**P32KA22CP**
3/8 NPT	**P32KA93CP**	3/8 BSPT	**P32KA23CP**
1/2 NPT	**P32KA94CP**	1/2 BSPT	**P32KA24CP**
3/4 NPT	**P32KA96CP**	3/4 BSPT	**P32KA26CP**
1/4 BSPP	**P32KA12CP**		
3/8 BSPP	**P32KA13CP**		
1/2 BSPP	**P32KA14CP**		
3/4 BSPP	**P32KA16CP**		

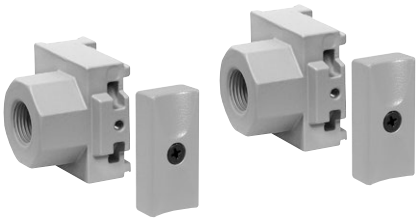

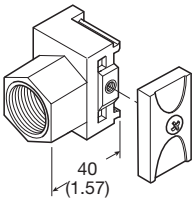

Angle Bracket

(Fits to regulator and filter/regulator bonnet)

P33KA00MR

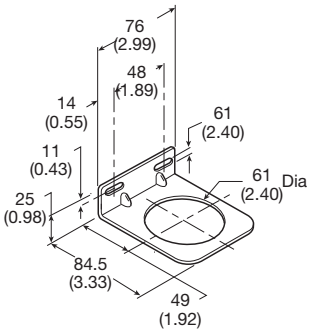

L-Bracket

(Fits to filter and lubricator body)

P33KA00ML

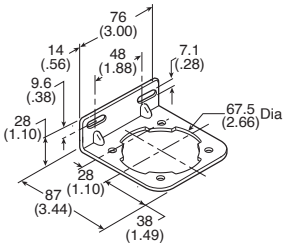

T-Bracket

(fits to body connector or port block)

P32KA00MB

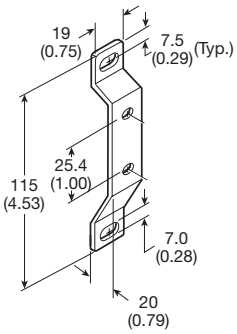

Most Popular

Series	Description	Part Number	
P31 P32 P33	Panel Mount Nut (Plastic)	**P31KA00MP** **P32KA00MP** **P33KA00MP**	
P31 P32 P33	Panel Mount Nut (Aluminum)	**P31KA00MM** **P32KA00MM** **P33KA00MM**	
P31 P32 P33	5µ Element Kit	**P31KA00ESE** **P32KA00ESE** **P33KA00ESE**	
P31 P32 P33	1µ Element Kit	**P31KA00ES9** **P32KA00ES9** **P33KA00ES9**	
P31 P32 P33	0.01µ Element Kit	**P31KA00ESC** **P32KA00ESC** **P33KA00ESC**	
P31 P32 P33	Adsorber Element Kit	**P31KA00ESA** **P32KA00ESA** **P33KA00ESA**	
P32 / P33	Auto Drain Kit	**P32KA00DA**	
P32 / P33	Differential Pressure Indicator Kit	**P32KA00RQ**	
P31 / P32 / P33	Drip Control Assembly Kit	**P32KA00PH**	
P31 P32 / P33	Fill Plug Kit	**P31KA00PL** **P32KA00PL**	
P31 P32 P33	Lubricator - Plastic Bowl w/ Bowl Guard No Drain	**P31KB00BGN** **P32KB00BGN** **P33KA00BGN**	

Most Popular

Series	Description	Part Number	
P31 P32 P33	Lubricator - Metal Bowl w/o Sight Gauge No Drain	**P31KB00BMN** **P32KB00BMN** **P33KA00BMN**	
P32 P33	Lubricator - Metal Bowl w/ Sight Gauge No Drain	**P32KB00BSN** **P33KA00BSN**	
P31 P32 P33	Metal Bowl w/o Sight Gauge & Manual Drain	**P31KB00BMM** **P32KB00BMM** **P33KA00BMM**	
P31	Metal Bowl w/o Sight Gauge & Pulse Drain	**P31KB00BMB**	
P32 P33	Metal Bowl w/o Sight Gauge & Auto Drain	**P32KB00BMA** **P33KA00BMA**	
P32 P33	Metal Bowl w/ Sight Gauge & Manual Drain	**P32KB00BSM** **P33KA00BSM**	
P32 P33	Metal Bowl w/ Sight Gauge & Auto Drain	**P32KB00BSA** **P33KA00BSA**	
P31 P32 P33	Plastic Bowl w/ Bowl Guard & Manual Drain	**P31KB00BGM** **P32KB00BGM** **P33KA00BGM**	
P31	Plastic Bowl w/ Bowl Guard & Pulse Drain	**P31KB00BGB**	
P32 P33	Plastic Bowl w/ Bowl Guard & Auto Drain	**P32KB00BGA** **P33KA00BGA**	

Most Popular

Series	Description	Connection	Part Number	
P31 For P31 with gauge air gauge M2.5	Square Flush Mounting Gauge Kit	0-60 psig 0-160 psig 0-290 psig 0-4 bar 0-11 bar 0-20 bar	**P31KA060XB** **P31KA160XB** **P31KA290XB** **P31KA04BXB** **P31KA11BXB** **P31KA20BXB**	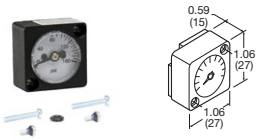
P31 For P31 with gauge air port 1/8	Square Flush Mounting Gauge Kit	0-60 psig 0-160 psig 0-4 bar 0-11 bar	**K4511SCR060** **K4511SCR160** **K4511SCR04B** **K4511SCR11B**	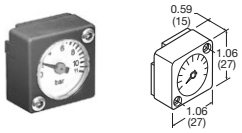
P32/P33	MPS-34 Digital Sensor Cable Air Port Gauge	0-10 bar / PNP with 4-20mA / M8 4 Pin M8 4 Pin 2 meter M8 4 Pin 5 meter Adaptor 1/8BSP to 1/4BSP	**MPS-P34G-PCI** **CB-M8-4P-2M-PUR** **CB-M8-4P-5M-PUR** **01781310**	
P32 / P33	50mm Round Gauge (Double scale, with metallic ring)	0-60 psig / 0-4 bar 1/4" 0-160 psig / 0-10 bar 1/4" 0-300 psig / 0-20 bar 1/4"	**P6G-ERB2040** **P6G-ERB2110** **P6G-ERB2200**	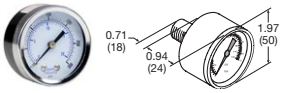
P31 P32 P33	Body Connector O-ring (Replacement kit) (Pack of 10)		**P31KA00CY** **P32KA00CY** **P33KA00CY**	
P32	Tamperproof Knob Kit		**P32KB00AT**	
P31 P32	Tamperproof Lockable Kit		**P31KB00AL** **P32KB00AL**	

Pressure Switches

P31/P32/P33/ P3Y	Pressure Switches KL with plug	1/8 male, 1 à 10 bar (PR / 1-10 NC ST 1/8 48) Break contact, IP65, Max 48V 1 to 10 bar (PR / 1-10 NO ST 1/8 48) Make contact, IP65, Max 48V	KL3437-00 KL3438-00	
	Adapter	* Male-1/4 to female-1/8	0178 13 10	
	Pressure sensor block without plug	0,5 to 8 (G1/4-8I-DIN), IP65, Max 250V 1 to 16 (G1/4-16I-DIN), IP65, Max 250V	KL3202-00 KL3203-00	
	Adapter	* Male-1/4 to male-1/4	0901 00 13	
	plug DIN EN 175301-803, Form A, ISO 4400	GSD-30DS Standard 4-pin GSD-30DSL24V with DEL 24V 4-pin GSD-30DSL230V with DEL 230V 4-pin	KL3349-00 KL3350-00 KL3351-00	

Most Popular

Solenoid Operators - CNOMO

Solenoid Operators, Coil Combinations

	NC Normal Operator with 22 x 30 standard coil	NC Normal Operator with 30 x 30 standard coil
Working pressure	0 to 10 bar	0 to 10 bar
Ambient temperature	-10°C to 60°C *	-10°C to 60°C *
Power (DC)	4.8W	2.7W
Power (AC)	8.5VA	4.9VA
Voltage tolerance	+/-10%	+/-10%
Duty cycle	100%	100%
Insulation class	F	F
Electric connection	B Industrial	DIN 43650A
Protection	IP65	IP65
Approval		UL/CSA
Working media	All neutral media such as compressed air	

* Limited to 50°C if use with 100% duty cycle

Transients

Interrupting the current through the solenoid coil produces momentary voltage peaks which, under unfavorable conditions, can amount to several hundred times the rated operating voltage. Normally, these transients do not cause problems, but to achieve the Maximum life of relays in the circuit (and particularly of transistors, thyristors and integrated circuits) it is desirable to provide protection by means of voltage-dependent resistors (varistors). All connectors/cable plugs EN175301-803 with LED's include this type of circuit protection.

Materials

Pilot Valve	
Body:	Polyamide
Armature tube:	Brass
Plunger & core:	Corrosion resistant Cr-Ni steel
Seals:	Fluorocarbon
Screws:	Stainless steel
Coil	
Encapsulation material:	Thermoplastic as standard Duroplast for M12 connection

P31 Series only - Solenoid coils 15mm NC

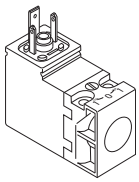

Voltage	Order code Override, blue, Non-Locking Flush	Weight (kg)
24VDC	**P2E-KV32C1**	0.038
115VAC 50Hz / 120VAC 60Hz	**P2E-KV31F1**	0.038

Solenoid Coils with M12 Connection

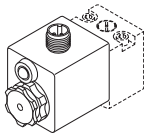

Voltage	Part Number	Weight (kg)
Direct current		
24VDC	**P2FC6449**	0.065

Spare Base Solenoid Pilot Operator CNOMO NC

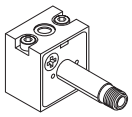

Description	Part Number Non-Lock Manual Override	Weight (kg)
Standard Duty	**P2FP23N4B**	0.065
No Override	**P2FP23N4A**	0.065

Note: Solenoid pilot operators are fitted to the Global range. Order the above part numbers for spares. The operators are supplied with mounting screws and interface 'O' rings. Coils and connectors must be ordered separately.

Solenoid Coils with DIN A or Industrial B Connection

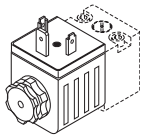

Voltage	22mm x 30mm Part Number B Industrial Standard	Weight (kg)	30mm x 30mm Part Number DIN 43650A Standard	Weight (kg)
Direct current				
24VDC	**P2FCB449**	0.093	**P2FCA449**	0.105
Alternative current				
110V 50Hz, 120V 60Hz	**P2FCB453**	0.093	**P2FCA453**	0.105

Most Popular

Solenoid Connectors / Cable Plugs EN175301-803

		Description	Order code 15mm Form C ISO15217	Order code 22mm Form B Industrial	Order code 30mm Form A ISO4400
With large headed screw suitable for mounting in inaccessible or recess position		Standard IP65	**P8C-C**		
		24V DC LED and protection IP65	**P8C-C26C**		
		110V AC LED and protection IP65	**P8C-C21E**		
With standard screw		Standard IP65 without flying lead	**P8C-D**	**3EV10V10**	**3EV290V10**
		With LED and protection 24V AC/DC	**P8C-D26C**	**3EV10V20-24**	**3EV290V20-24**
		With LED and protection 110V AC	**P8C-D21E**	**3EV10V20-110**	**3EV290V20-110**
		With LED and protection 230V AC		**3EV10V20-230**	**3EV290V20-230**
With cable		Standard with 2m cable IP65	**P8L-C2**		
		Standard with 5m cable IP65	**P8L-C5**		
		24V AC/DC, 2m cable LED and protection IP65	**P8L-C226C**		
		24V AC/DC, 5m cable LED and protection IP65	**P8L-C526C**	**3EV10V20-24L5**	**3EV290V20-24L5**
		24V AC/DC, 10m cable LED and protection IP65	**P8L-CA26C**		
		110V AC/DC, 2m cable LED and protection IP65	**P8L-C221E**		
		110V AC/DC, 5m cable LED and protection IP65	**P8L-C521E**	**3EV10V20-110L5**	**3EV290V20-110L5**
		230V AC, 5m cable LED and protection IP65		**3EV10V20-230L5**	**3EV290V20-230L5**

Solenoid Coil & Cable Plug Dimensions (mm)

15mm

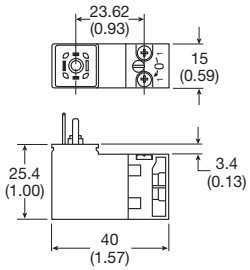

22 x 30mm

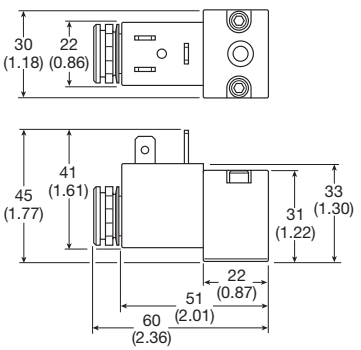

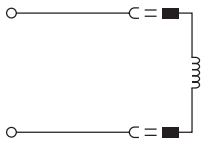

P8C-C
P8C-D
P8L-C2
P8L-C5
3EV10V10

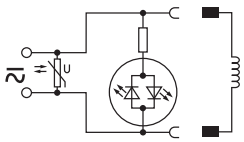

P8C-D26C	**P8L-C226C**
P8C-D21E	**P8L-C526C**
P8C-C26C	**P8L-CA26C**
P8C-C21E	**P8L-C221E**
	P8L-C521E
3EV10V20-24	**3EV10V20-24L5**
3EV10V20-110	**3EV10V20-110L5**
3EV10V20-230	**3EV10V20-230L5**

30 x 30mm

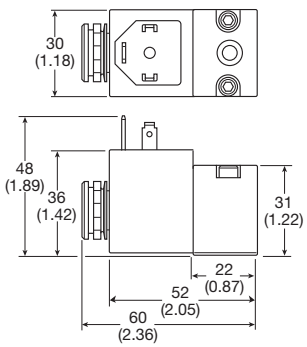

Form C
Cable plugs

P8C-C
P8C-C26C
P8C-C21E
P8C-D
P8C-D26C
P8C-D21E

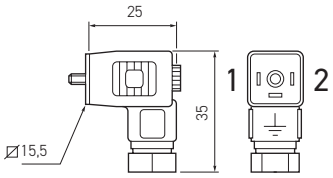

Form C
Cable plugs

P8L-C2
P8LC5
P8L-C226C
P8L-C526C
P8L-CA26C
P8L-C221E
P8L-C521E

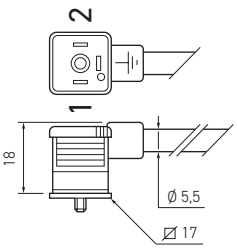

Form B Cable plugs

3EV10V10

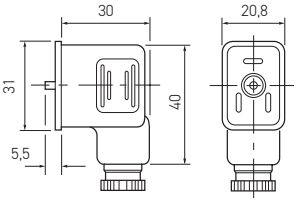

Form A Cable plugs

3EV290V10

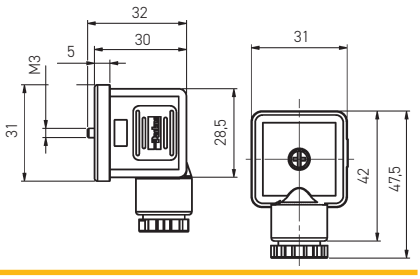

Most Popular

P3Y System

The P3Y system allows units to be connected together without the use of pipe connectors. This saves space, provides constant mounting centers, and maintains a modern aesthetically pleasing appearance.

The P3Y filters are specially designed to efficiently filter out rust, dirt, moisture and other impurities from compressed air lines. Operation is fully automatic with a minimum of pressure drop. Coalescing filters and adsorber filters for high purity air are also included in the P3Y series.

The P3Y regulators are designed to provide quick response and accurate pressure regulation for the most demanding hi-flow industrial applications.

The rolling diaphragm was designed for long trouble-free operation and will not rupture or tear under high cycle or demanding applications. The P3Y mist lubricators are designed to provide lubrication for many general purpose applications.

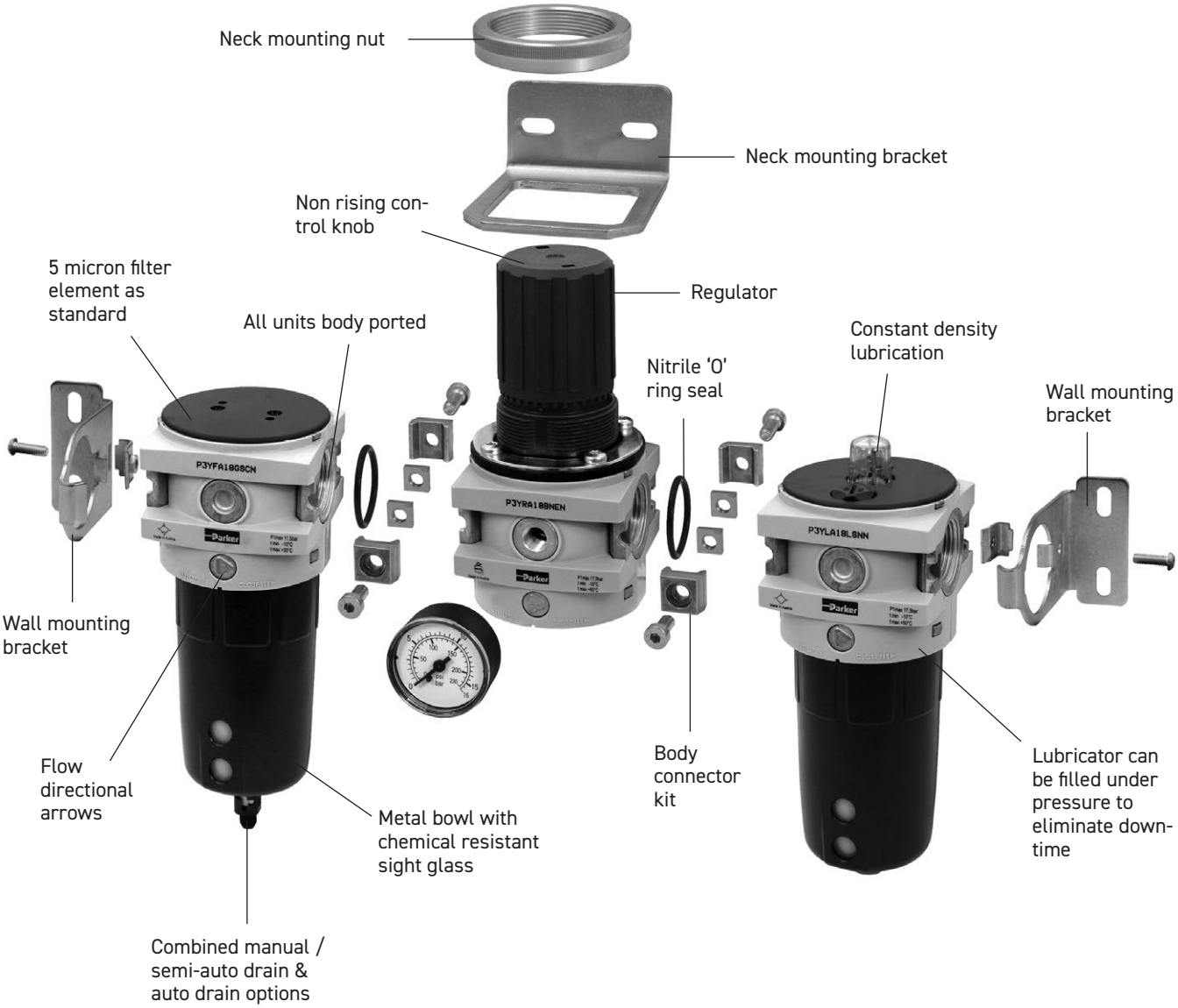

P3Y Particulate Filter - Large

- Integral 3/4" or 1" ports (NPT & BSPP)
- High efficiency particulate element as standard
- Excellent water removal efficiency
- Robust but lightweight Aluminum construction
- Low temperature -40°C (-40°F) with combined manual / semi-auto drain as standard

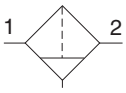

Manual drain

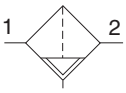

Auto drain

Port Size	Description	Part Number
3/4"	Combined Manual /Semi-Auto Drain	**P3YFA16ESCN**
3/4"	Auto Drain	**P3YFA16ESAN**
1"	Combined Manual /Semi Auto Drain	**P3YFA18ESCN**
1"	Auto Drain	**P3YFA18ESAN**

Operating Information

Supply pressure (max)*:		254 psig (17.5 bar)
Operating temperature:		
Auto drain		14°F to 140°F (-10°C to 60°C)
Combined drain		-40°F to 140°F (-40°C to 60°C)
Standard filtration		5 micron
Manual / semi-auto drain:		Closed at 11.6 psig (0.8 bar) G1/8 thread male
Auto drain bowl pressure:		Closed at 11.6 psig (0.8 bar)
Bowl capacity:		4.4 US oz. (130 cm^3)
Standard filtration:		5 micron
Flow capacity†:	3/4"	170 scfm (80.2 dm^3/s, ANR)
	1"	170 scfm (80.2 dm^3/s, ANR)
Fluid:		Compressed air
Weight:		1.98 lb (0.9 kg)

† Inlet pressure 91.4 psig (6.3 bar) inlet pressure and 7.3 psig (0.5 bar) pressure drop.

* Air supply must be dry enough to avoid ice formation at temperatures below 35.6°F (2°C).

Air quality: Within ISO 8573-1: 2010 Class 6 and 7 (Particulates)

Ordering Information:

P3YFA 1 8 E SC N

Basic Series	
Filter	P3YFA

Thread Type*	
BSPP	1
NPT	9

Port Size	
3/4	6
1	8

Element	
E	5 micron
G	30 micron

Drain Type	
SC	Combined Manual / Semi-Auto Drain
SA	Auto drain

*** Note:** For 1-1/2" ported unit, please order P3YKA*BCP port block kit separately.

Most Popular

Material Specifications

Body	Aluminum
Sight glass and bowl Polypropylene	
Body cover	ABS
Element	Sintered P.E.
Seals	Nitrile NBR
Manual / semi-auto drain	Acetal
Automatic drain	PA / Ø 10mm brass connection

Repair and Service Kits

5 micron element kit	**P3YKA00ESE**
30 micron element kit	**P3YKA00ESG**
Bowl kit with combined manual / semi auto drain	**P3YKA00BSC**
Bowl kit with auto drain	**P3YKA00BSA**

Flow Characteristics

(3/4") Filter 5 micron

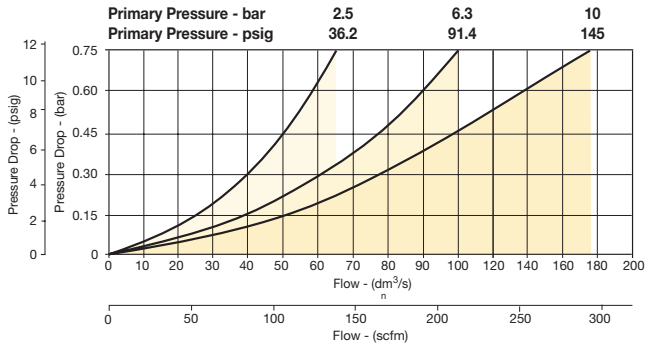

(1") Filter 5 micron

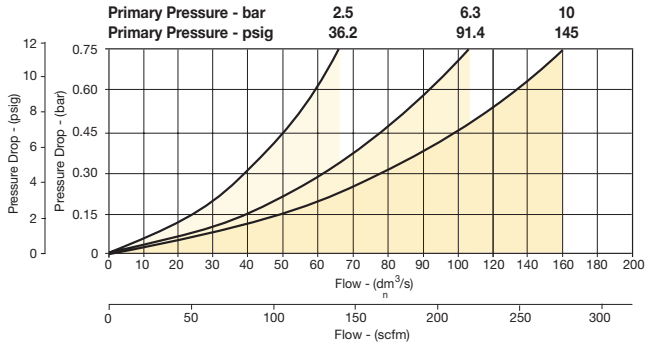

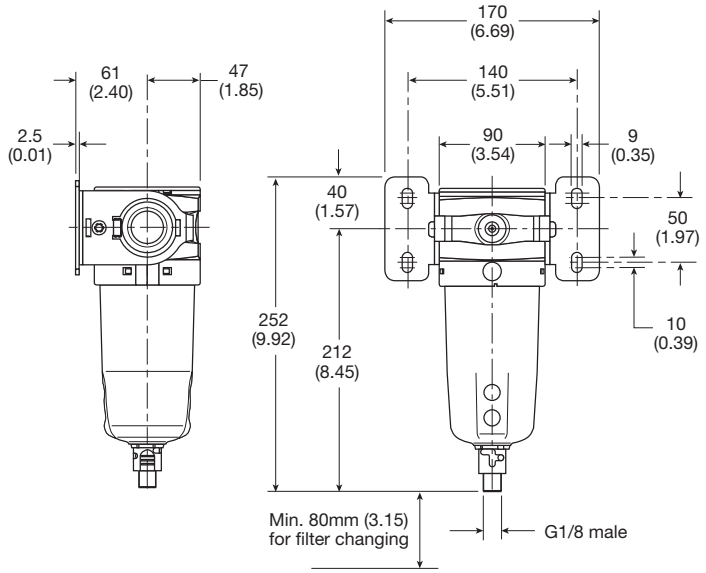

mm (Inches)

Most Popular

P3Y Coalescing and Adsorber Filters - Large

- Extended high efficiency filter element provides greater filtration surface area.
- Integral 3/4" or 1" ports (BSPP & NPT)
- Removes liquid aerosols and sub micron particles
- Oil free air for critical applications, such as air gauging, pneumatic instrumentation and control
- Adsorber activated carbon element removes oil vapors and most hydrocarbons
- Robust but lightweight aluminum construction

Notes: To optimize the life of the coalescing element, it is advisable to install a P3YFA pre-filter with a 5 micron element upstream of the coalescing filter.

To optimize the life of the adsorber element, it is advisable to install a P3Y coalescing 0.01 micron filter upstream of the adsorber filter.

Port Size	Description	Part Number
3/4"	Coalescing Filter 0.01 micron, Combined Manual / Semi-Auto Drain	**P3YFA16DSCN**
3/4"	Coalescing Filter 0.01 micron, Auto Drain	**P3YFA16DSAN**
1"	Coalescing Filter 0.01 micron, Combined Manual / Semi-Auto Drain	**P3YFA18DSCN**
1"	Coalescing Filter 0.01 micron, Auto Drain	**P3YFA18DSAN**

Operating Information

Supply pressure (max)*:	254 psig (17.5 bar)
Operating temperature:	14°F to 140°F (-10°C to 60°C)
Manual / auto drain:	Closed at 11.6 psig (0.8 bar) G1/8 thread male
Media specifications: Adsorber, max oil carryover	0.008 mg/m³ (PPM w/w)
Bowl capacity:	4.4 US oz. (130 cm³)
Standard filtration:	0.01 micron
Flow capacity†:	
¾" 1.0 micron coalescing 290 scfm (137 dm3/s, ANR)	
1" 1.0 micron coalescing 307 scfm (145 dm3/s, ANR)	
¾" 0.01 micron coalescing 275 (177 dm3/s, ANR)	
1" 0.01 micron coalescing 307 (145 dm3/s, ANR)	
¾" Activated carbon adsorber 275 (177 dm3/s, ANR)	
1" Activated carbon adsorber 307 (145 dm3/s, ANR)	
Fluid:	Compressed air
Weight:	3.5 lb (1.6 kg)

† Inlet pressure 91.4 psig (6.3 bar) inlet pressure and 7.3 psig (0.5 bar) pressure.

* Air supply must be dry enough to avoid ice formation at temperatures below 35.6°F (2°C).

Air quality:ISO 8573-1:2010: 0.01µm closes to Class 1 for maximum particle size and concentration of solid contaminants, and closes to Class 1 on maximum oil content (ppm/wt). Within ISO 8573-1:2010: Adsorber closes to Class 1 on maximum oil content (ppm/wt).

Ordering Information:

P3YFA 1 8 A SC N

Basic Series	
Coalescing Filter	P3YFA

Thread Type*	
BSPP	1
NPT	9

Port Size	
3/4	6
1	8

	Element
D	0.01 micron Element with DPI Standard
A	Adsorber
2	1 Micron

	Drain Type
SC	Combined Manual / Semi Auto Drain
SA	Auto Drain

* **Note:** For 1-1/2" ported unit, please order P3YKA*BCP port block kit separately.

Auto drain is recommended for 0,01 or 1 micron. Manual drain for adsorber.

Most Popular

Material Specifications

Body	Aluminum
Sight glass and bowl Polypropylene	
Filter cover	ABS
Coalescing element	Borosilicate & nano fibers
Top & bottom end cap (coalescing)	Aluminum
Adsorber element	Activated carbon
Top & bottom end cap (adsorber)	Glass filled nylon
Support cylinders	Grade 430 stainless steel
Support media	Polypropylene
Anti re-entrainment barrier	Polyester
Encapsulation	Epoxy resin / hardener
Seals	Nitrile NBR
Manual / semi-auto drain	Acetal
Auto drain	PA / Ø 10mm brass connection
Differential pressure indicator, body	Acetal
Differential pressure indicator, internal parts	Acetal
Differential pressure indicator, spring	Stainless steel
Differential pressure indicator, seals	Nitrile NBR
Differential pressure indicator, support plate	ABS
Differential pressure indicator, screws	Steel / zinc plated

Repair and Service Kits

0.01 micron element kit	**P3YKA00ESC**
Adsorber element kit	**P3YKA00ESA**
1 micron coalescing element kit	**P3YKA00ES9**
Bowl kit with combined manual / semi auto drain	**P3YKA00BSC**
Bowl kit with auto drain	**P3YKA00BSA**
Differential pressure indicator kit	**P3YKA00RQ**

Flow Characteristics

(3/4") 0.01 Micron Coalescing Filter Saturated

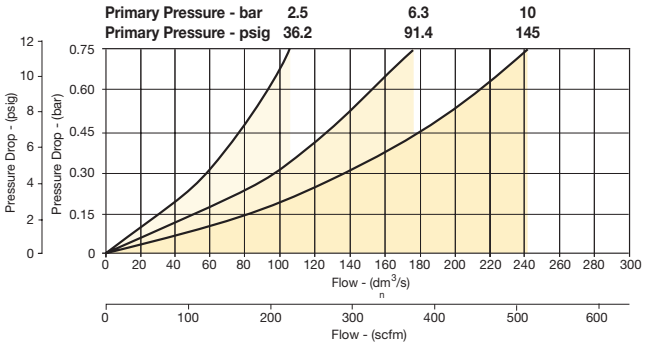

(1") 0.01 Micron Coalescing Filter Saturated

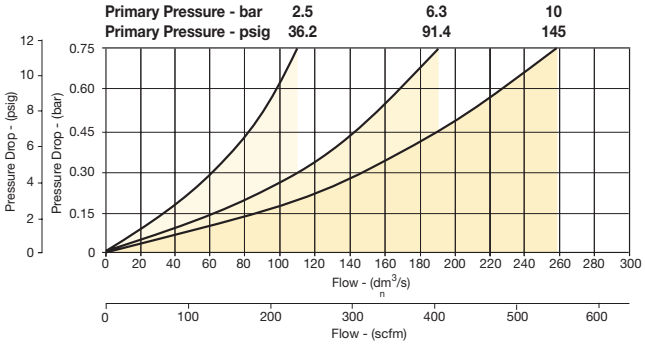

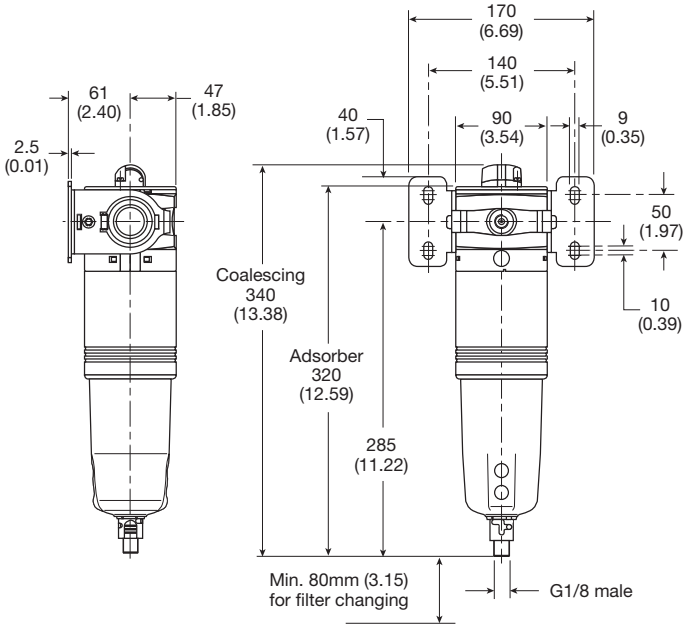

mm (Inches)

Most Popular

P3Y Regulators - Large

- Integral 3/4" or 1" ports (BSPP and NPT)
- Robust but lightweight aluminum construction
- Secondary pressure ranges 12 and 16 bar
- Rolling diaphragm for extended life
- Secondary aspiration plus rolling diaphragm provides quick response and accurate pressure regulation
- Optional tamperproof regulator padlock
- Reverse flow / relieving option
- Low temperature -40°C (-40°F)

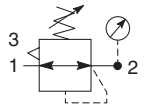

Self relieving regulator with gauge

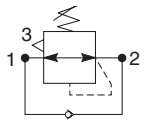

Reverse flow relieving regulator

Port Size	Description	Part Number
3/4"	174 psig relieving + pressure gauge	**P3YRA16BNFN**
1"	174 psig relieving + pressure gauge	**P3YRA18BNFN**

Operating Information

Supply pressure (max)*:		254 psig (17.5 bar)
Operating temperature:		-40°F to 140°F (-40°C to 60°C)
Flow capacity†:	3/4" 1"	380 scfm (179.3 dm³/s, ANR) 550 scfm (259.6 dm³/s, ANR)
Fluid:		Compressed air
Gauge port (x2):		1/4"
Weight:		2.4 lb (1.08 kg)

† Inlet pressure 145 psig (10 bar) inlet pressure, 91.4 psig (6.3 bar) set pressure and 7.3 psig (0.5 bar) pressure drop.

* Air supply must be dry enough to avoid ice formation at temperatures below 35.6°F (2°C).

Ordering Information:

P3YRA 1 8 B N F N

Basic Series	
Regulator	P3YRA

Thread Type*	
BSPP	1
NPT	9

Port Size	
3/4	6
1	8

Relief	
B	Relieving
R	Reverse Flow / Relieving

Lockable	
N	Standard
A†	Lockable

Adjustment Range	
F	0 to 174 psi (0 to 12 bar), Gauge
J	0 to 232 psi (0 to 16 bar), Gauge

Notes:
* For 1-1/2" ported unit, please order P3YKA*BCP port block kit separately.
† Not field convertible.

Most Popular

Material Specifications

Body	Aluminum
Bonnet	Glass filled polyamide
Regulator cover	ABS
Control knob	Glass filled polyamide
Valve	Brass / NBR
Seals	Nitrile NBR
Screws	Steel / zinc plated

Repair and Service Kits

Angle bracket + metal lock ring	**P3YKA00MS**
Panel mounting nut	**P3YKA00MM**
Diaphragm kit (relieving type)	**P3YKA00RR**
Diaphragm kit (non-relieving type)	**P3YKA00RN**
0 to 300 psig (0 to 20 bar), gauge 1/4" port	**KG8013-00**

⚠ WARNING

Product rupture can cause serious injury.
Do not connect regulator to bottled gas.
Do not exceed Maximum primary pressure rating.

CAUTION:

REGULATOR PRESSURE ADJUSTMENT – The working range of knob adjustment is designed to permit outlet pressures within their full range. Pressure adjustment beyond this range is also possible because the knob is not a limiting device. This is a common characteristic of most industrial regulators, and limiting devices may be obtained only by special design. For best performance, regulated pressure should always be set by increasing the pressure up to the desired setting.

Flow Characteristics

(3/4") Regulator

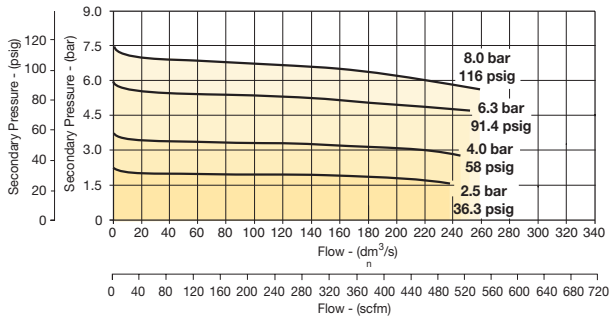

(1") Regulator

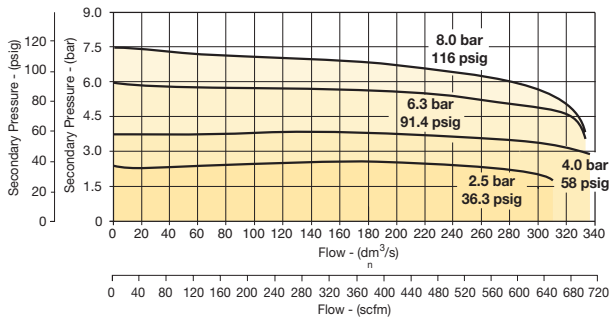

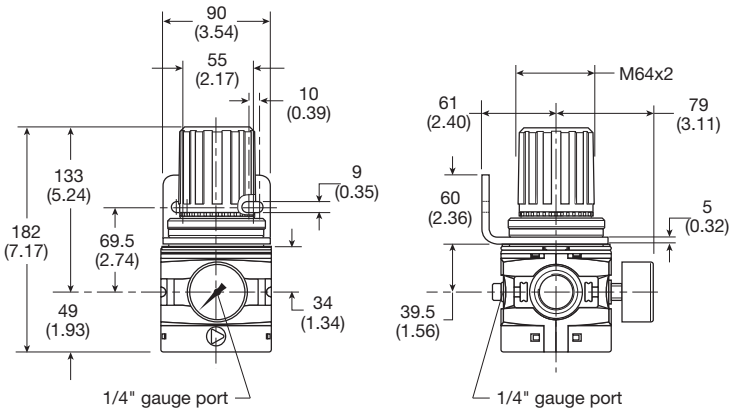

mm (Inches)

Most Popular

P3Y Pilot Operated Regulator - Large

- Integral 3/4" or 1" ports (BSPP & NPT)
- Pilot controlled regulators can be mounted "out of reach" with pilot regulator installed in a convenient location
- Constant pilot bleed control for accurate pressure control
- Balanced poppet provides quick response
- High flow

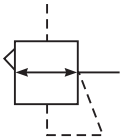

Port Size	Description	Part Number
3/4"	Pilot operated regulator	**P3YRA16BPPN**
1"	Pilot operated regulator	**P3YRA18BPPN**

Operating Information

Supply pressure (max):		254 psig (17.5 bar)
Operating temperature:		-40°F to 140°F (-40°C to 60°C)
Flow capacity†:	3/4"	550 scfm (259.6 dm^3/s, ANR)
	1"	550 scfm (259.6 dm^3/s, ANR)
Fluid:		Compressed air
Weight:		2.6 lb (1.2 kg)

† Inlet pressure 145 psig (10 bar) inlet pressure, 91.4 psig (6.3 bar) set pressure and 7.3 psig (0.5 bar) pressure drop.

Ordering Information:

P3YRA **1** **8** **BPPN**

Basic Series	
Pilot Operated Regulator	P3YRA

Thread Type*	
BSPP	1
NPT	9

Port Size	
3/4	6
1	8

*** Note:** For 1-1/2" ported unit, please order P3YKA*BCP port block kit separately.

Most Popular

Material Specifications

Body	Aluminum
Body cover	ABS
Valve	Brass / NBR composite
Pilot valve booster	Aluminum
Seals	Nitrile NBR
Screws	Zinc plated steel

⚠ WARNING

Product rupture can cause serious injury.
Do not connect regulator to bottled gas.
Do not exceed Maximum primary pressure rating.

Flow Characteristics

3/4" and 1" Pilot Regulator

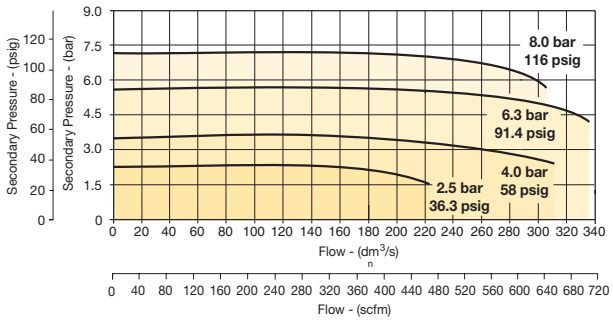

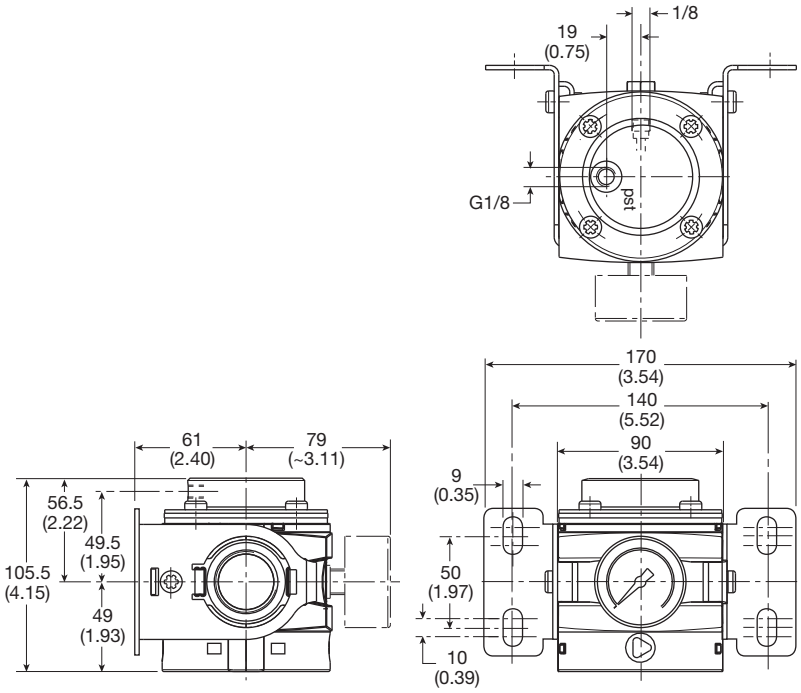

mm (Inches)

Most Popular

P3Y Filter / Regulator - Large

- Integral 3/4" or 1" ports (BSPP or NPT)
- High efficiency element as standard
- Excellent water removal efficiency
- Robust but lightweight aluminum construction
- Secondary pressure ranges 12 and 16 bar
- Rolling diaphragm for extended life
- Secondary aspiration plus balanced poppet provides quick response and accurate pressure regulation.
- Reverse flow / relieving option
- Low temperature -40°C (-40°F) with combined manual / semi-auto drain as standard

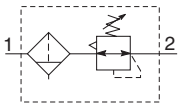

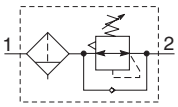

Port Size	Description (0 to 174 psi)	Part Number
3/4"	Relieving, Gauge, Combined Manual / Semi-Auto Drain	**P3YEA16ESCBNFN**
3/4"	Relieving, Gauge, Auto Drain	**P3YEA16ESABNFN**
1"	Relieving, Gauge, Combined Manual / Semi-Auto Drain	**P3YEA18ESCBNFN**
1"	Relieving, Gauge, Auto Drain	**P3YEA18ESABNFN**

Operating Information

Supply pressure (max)*:		254 psig (17.5 bar)
Operating temperature:		
Auto drain		14°F to 140°F (-10°C to 60°C)
Combined drain		-40°F to 140°F (-40°C to 60°C)
Standard filtration:		5 micron
Manual / semi-auto drain:		Closed at 11.6 psig (0.8 bar) G1/8 thread male
Auto drain bowl pressure:		Closed at 11.6 psig (0.8 bar)
Bowl capacity:		4.4 US oz. (130 cm^3)
Standard filtration:		5 micron
Flow capacity†:	3/4" 1"	335 scfm (158.1 dm^3/s, ANR) 465 scfm (219.5 dm^3/s, ANR)
Fluid:		Compressed air
Gauge port (x2):		1/4"
Weight:		3.3 lb (1.5 kg)

† Inlet pressure 91.4 psig (6.3 bar) inlet pressure and 7.3 psig (0.5 bar) pressure drop.

* Air supply must be dry enough to avoid ice formation at temperatures below 35.6°F (2°C).

Air quality: Within ISO 8573-1: 2010 Class 6 and 7 (Particulates)

Ordering Information:

P3YEA 1 8 E SA B N F N

Basic Series

Filter / Regulator	P3YEA

Thread Type*

BSPP	1
NPT	9

Port Size

3/4	6
1	8

Element

E	5 micron
G	30 micron

Drain Type

SC	Combined Manual / Semi-Auto Drain
SA	Auto Drain

Relief

B	Relieving
R	Reverse Flow / Relieving

Lockable

N	Standard
A†	Lockable

Adjustment Range

F	0 to 174 psi (0 to 12 bar), Gauge
J	0 to 232 psi (0 to 16 bar), Gauge

Notes:
* For 1-1/2" ported unit, please order P3YKA*BCP port block kit separately.
† Not field convertible.

Most Popular

Material Specifications

Body	Aluminum
Sight glass and bowl Polypropylene	
Body cover	ABS
Element	Sintered polypropylene
Seals	Nitrile NBR
Manual / semi-auto drain	Acetal
Auto drain	PA / Ø 10 mm brass connection
Bonnet	Glass filled polyamide
Control Knob	Glass filled polyamide
Valve	Brass / NBR
Screws	Steel / zinc plated

Repair and Service Kits

5 micron element kit	**P3YKA00ESE**
30 micron element kit	**P3YKA00ESG**
Bowl kit with combined manual/semi auto drain	**P3YKA00BSC**
Bowl kit with auto drain	**P3YKA00BSA**
Key lock kit	**P3XKA00AS**
Diaphragm kit (relieving type)	**P3YKA00RR**
Diaphragm kit (non-relieving type)	**P3YKA00RN**
Angle bracket + metal lock ring	**P3YKA00MS**
Panel mount nut	**P3YKA00MM**
0 to 300 psig (0 to 20 bar), gauge 1/4" port	**KG8013-00**

Flow Characteristics

(3/4") 5 Micron Filter / Regulator

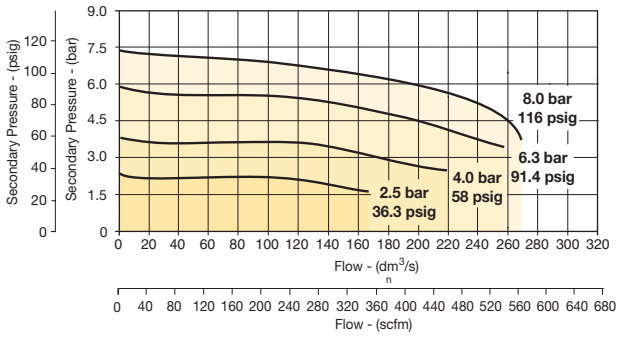

(1") 5 Micron Filter / Regulator

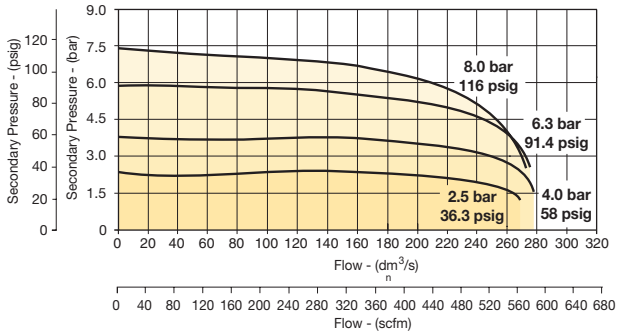

⚠ WARNING

Product rupture can cause serious injury.
Do not connect regulator to bottled gas.
Do not exceed Maximum primary pressure rating.

CAUTION:

REGULATOR PRESSURE ADJUSTMENT – The working range of knob adjustment is designed to permit outlet pressures within their full range. Pressure adjustment beyond this range is also possible because the knob is not a limiting device. This is a common characteristic of most industrial regulators, and limiting devices may be obtained only by special design. For best performance, regulated pressure should always be set by increasing the pressure up to the desired setting.

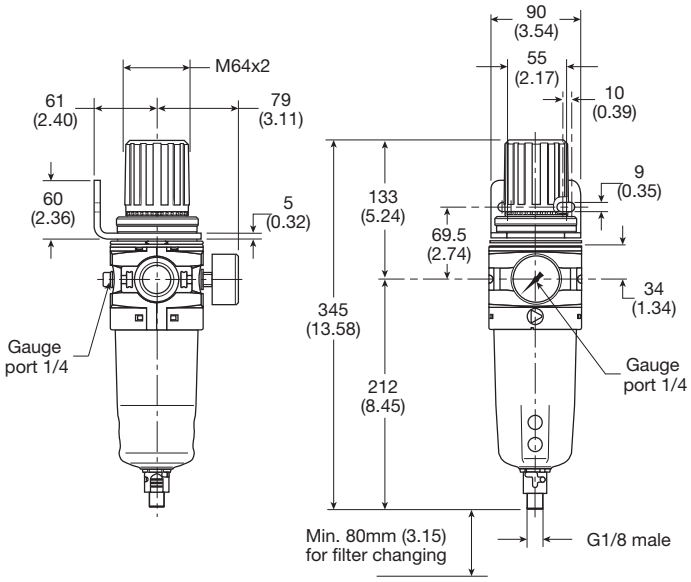

mm (Inches)

Most Popular

P3Y Lubricator - Large

- Integral 3/4" or 1" ports (BSPP and NPT)
- Robust but lightweight aluminum construction
- Proportional oil delivery over a wide range of air flows
- Possible to fill under system pressure eliminating down time
- Large oil reservoir

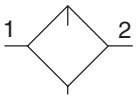

Lubricator
with drain

Port Size	Description	Part Number
3/4"	Oil Mist, Fill Under Pressure	**P3YLA16LSNN**
1"	Oil Mist, Fill Under Pressure	**P3YLA18LSNN**

Operating Information

Supply pressure (max)*:		254 psig (17.5 bar)
Operating temperature*:		14°F to 140°F (-10°C to 60°C)
Flow capacity†:	3/4" 1"	315 scfm (148.2 dm^3/s, ANR) 390 scfm (184.1 dm^3/s, ANR)
Fluid:		Compressed air
Weight:		1.8 lb (0.8 kg)

† Inlet pressure 91.4 psig (6.3 bar) inlet pressure and 7.3 psig (0.5 bar) pressure drop.

* Air supply must be dry enough to avoid ice formation at temperatures below 35.6°F (2°C).

Low flow start point (lubrication pick-up): at 6.3 bar (91.4 psig) inlet pressure 0.5 dm^3/s (1.1 scfm).

Ordering Information:

P3YLA **1** **8** **LSNN**

Basic Series	
Lubricator	P3YLA

Thread Type*	
BSPP	1
NPT	9

Port Size	
3/4	6
1	8

*** Note:** For 1-1/2" ported unit, please order P3YKA*BCP port block kit separately.

Most Popular

Material Specifications

Body	Aluminium
Sight glass and bowl Polypropylene	
Sight dome	Polyamide
Lubricator cover	ABS
Top & bottom end cap	Glass filled nylon
Bayonet support	Nylon
Seals	Nitrile NBR

Repair and Service Kits

Bowl kit	**P3YKA00BSN**
Refill plug	**P3YKA00PL**
Lubricator Oil VG32 - 1 litre 0,92 kg	**P3YKA00PPBB**

Flow Characteristics

(3/4") Lubricator

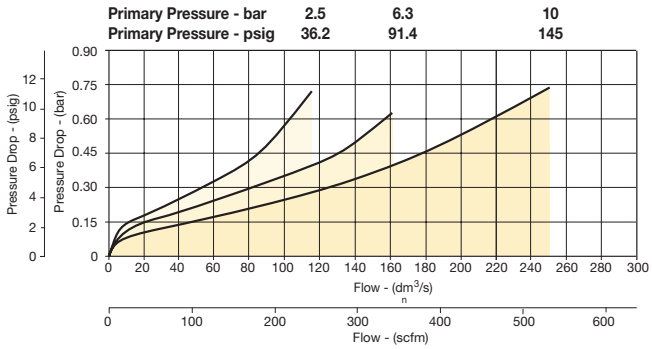

(1") Lubricator

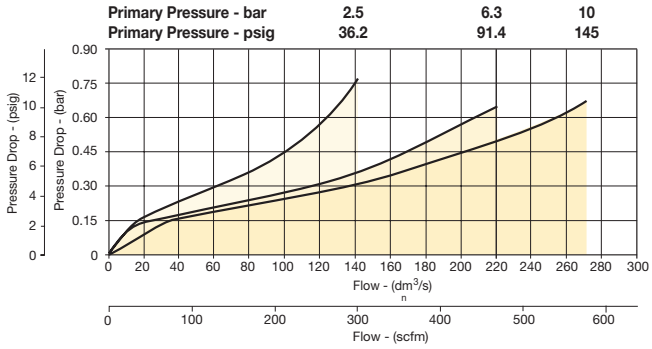

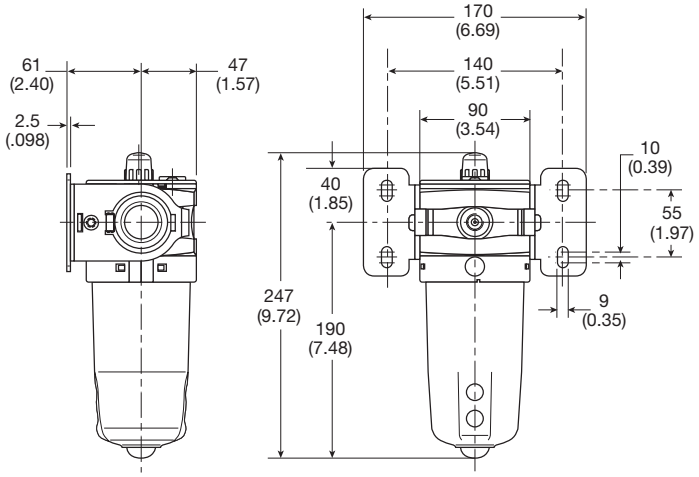

mm (Inches)

Most Popular

P3Y Combinations - Large

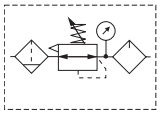

Filter + Regulator + Lubricator Combinations
5 micron element, 12 bar (174 psig) regulator + gauge and wall mounting bracket

Port Size	Flow‡	Weight lb (kg)	Combined Manual / Semi-Auto Drain†	Auto Drain†
3/4"	170 scfm (80.2 dm³/s, ANR)	7.3 (3.3)	**P3YCB16SECNFLNF**	**P3YCB16SEANFLNF**
1"	170 scfm (80.2 dm³/s, ANR)	7.3 (3.3)	**P3YCB18SECNFLNF**	**P3YCB18SEANFLNF**

† **Standard part numbers shown in bold. For other models refer to Options chart below.**
‡ Flow with 10 bar (145 psig) inlet pressure, 6.3 bar (91.4 psig) set pressure and 1 bar (14.5 psig) pressure drop.

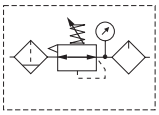

Filter / Regulator + Lubricator Combinations
5 micron element, 12 bar (174 psig) regulator + gauge and wall mounting bracket

Port Size	Flow‡	Weight lb (kg)	Combined Manual / Semi-Auto Drain†	Auto Drain†
3/4"	315 scfm (148.2 dm³/s, ANR)	6.2 (2.8)	**P3YCA16SECNFLNF**	**P3YCA16SEANFLNF**
1"	390 scfm (184.1 dm³/s, ANR)	6.2 (2.8)	**P3YCA18SECNFLNF**	**P3YCA18SEANFLNF**

† **Standard part numbers shown in bold. For other models refer to Options chart below.**
‡ Flow with 10 bar (145 psig) inlet pressure, 6.3 bar (91.4 psig) set pressure and 1 bar (14.5 psig) pressure drop.

Ordering Information:

P3YCA 1 8 SE C N F LNF

Basic Series	
Filter / Regulator + Lubricator	P3YCA
Filter + Regulator + Lubricator	P3YCB

Thread Type*	
BSPP	1
NPT	9

Port Size	
3/4	6
1	8

Element	
E	5 micron
G	30 micron

Drain Type	
C	Combined Manual / Semi-Auto Drain
A	Auto Drain

Adjustment Range	
F	0-12 bar (0 to 174 psi) with Gauge
J	0-16 bar (0 to 232 psi) with Gauge

*** Note:** For 1-1/2" ported unit, please order P3YKA*BCP port block kit separately.

⚠ WARNING

Product rupture can cause serious injury.
Do not connect regulator to bottled gas.
Do not exceed Maximum primary pressure rating.

CAUTION:
REGULATOR PRESSURE ADJUSTMENT –
The working range of knob adjustment is designed to permit outlet pressures within their full range. Pressure adjustment beyond this range is also possible because the knob is not a limiting device. This is a common characteristic of most industrial regulators, and limiting devices may be obtained only by special design. For best performance, regulated pressure should always be set by increasing the pressure up to the desired setting.

Most Popular

Popular Combination Dimensions mm (inches)

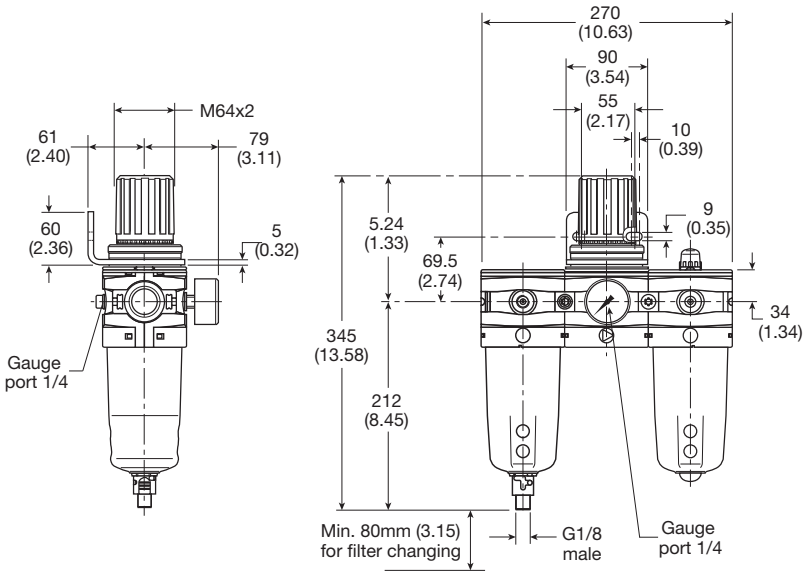

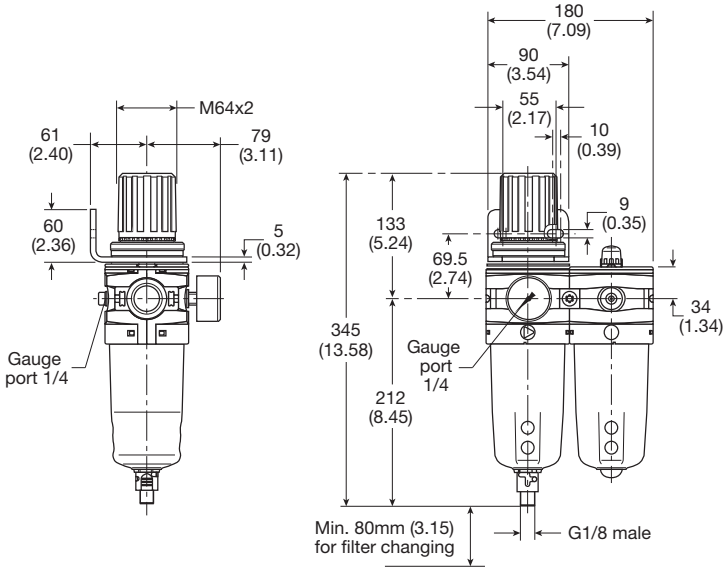

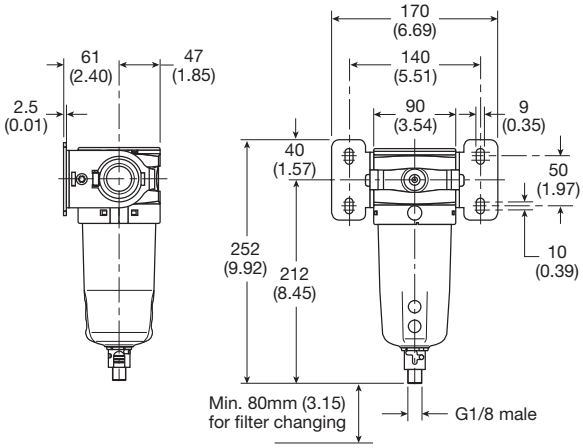

P3Y Combined Soft Start / Dump Valve - Large

- Modular design with 3/4" & 1" integral ports (BSPP or NPT)
- Provides for the safe introduction of pressure
- Automatically dumps downstream pressure on the loss of pilot signal
- Adjustable slow start
- Solenoid or air pilot options
- High flow & exhaust capability

P3Y Series Combined Soft Start / Dump Valves, provide for the safe introduction of pressure to machines or systems. Soft Start / Dump Valves when set, allow the pressure to gradually build to the set point before fully opening to deliver full flow at line pressure.

The controlled introduction of pressure can be an important safety factor and prevent damage to tooling when air pressure is introduced at machine or system start up.

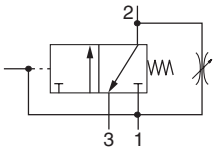

Port Size	Description	Part Number
3/4"	24VDC 30mm coil	**P3YTA16SCNA2CN**
1"	24VDC 30mm coil	**P3YTA18SCNA2CN**

Operating Information

Operating pressure (max):		
30mm coil		232 psig (16 bar)
Operating pressure (min):		2.9 psig (0.2 bar)
Operating temperature*:		
Solenoid operated		14°F to 140°F (-10°C to 60°C)
Air pilot operated		14°F to 140°F (-10°C to 60°C)
Air pilot port:		1/8"
Exhaust port:	NPT	3/4"
	BSPP	1"
Gauge port:		1/4"
Flow capacity†:	3/4"	371 scfm (175.1 dm^3/s, ANR)
	1"	424 scfm (200.1 dm^3/s, ANR)
Fluid:		Compressed air
Weight:	Air pilot	3.1 lb (1.4 kg)
	30mm coil	3.5 lb (1.6 kg)

† Inlet pressure 91.4 psig (6.3 bar) inlet pressure and 7.3 psig (0.5 bar) pressure drop.
* Air supply must be dry enough to avoid ice formation at temperatures below 35.6°F (2°C).
Snap pressure: Full flow when downstream pressure reaches 50% of the inlet pressure.

Ordering Information:

P3YTA 1 8 S C N A 2 C N

Solenoid type only

Basic Series

Soft Start / Dump Valve	P3YTA

Thread Type*

BSPP	1
NPT	9

Pilot Type

Solenoid Pilot	S

Solenoid Voltage

2CN	24VDC

Port Size

3/4	6
1	8

Actuator Interface

30mm Operator	C

Solenoid Type

A	30mm CNOMO Coil
D	30mm CNOMO Coil (M12 connection)

*** Note:** For 1-1/2" ported unit, please order P3YKA*BCP port block kit separately.

Most Popular

Material Specifications

Body	Aluminum
Body cover	ABS
Valve	Brass / NBR composite
Pilot valve booster	Aluminum
Seals	Nitrile NBR

Note: For solenoid coil and cable plug options see solenoid operator pages.

Flow Characteristics

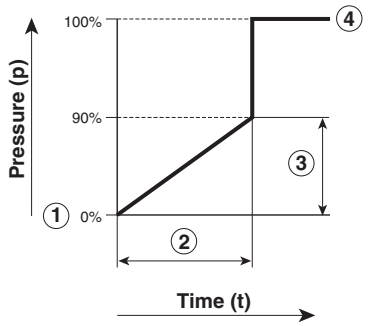

1. Start signal
2. Switching time delay
3. Gradual pressure build up
4. Operating pressure p^2 (= p^1)

Combined start / stop function

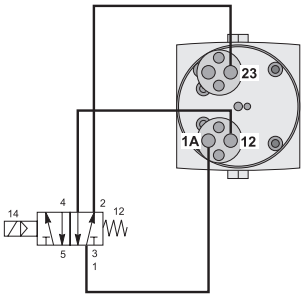

Combined start / stop function with acknowledgement

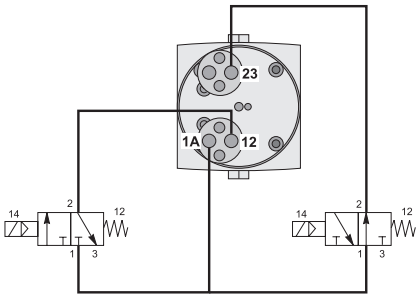

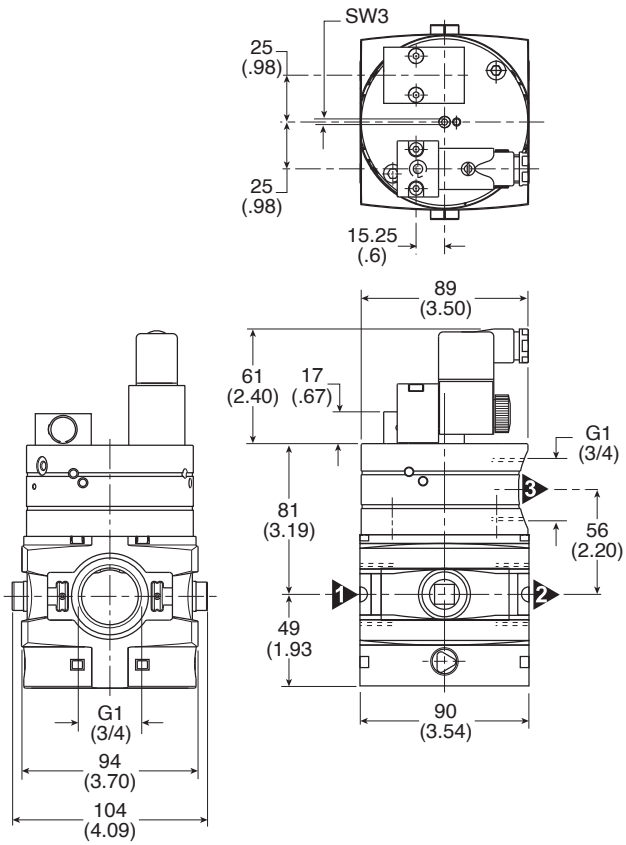

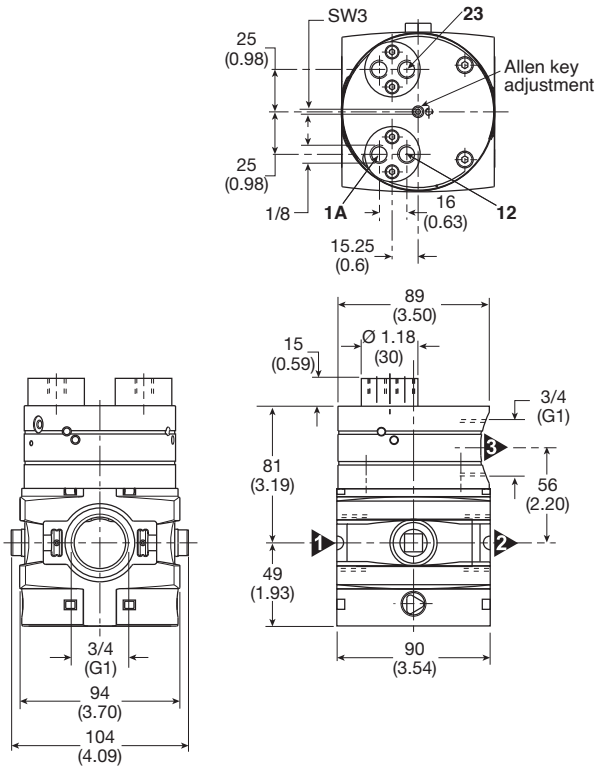

P3Y Modular Ball Valve - Large

- Positive bubble tight shut-off
- 90° turn handle to prevent unauthorized adjustment
- Pad lockable (up to 6 times)
- When the inlet pressure is turned off the downstream vents through the exhaust port

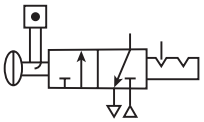

Ball / Lockout Valve shuts off downstream line pressure in the closed position with a 90° turn of the handle. In the closed position, inlet air pressure is blocked and downstream / system air is exhausted through a threaded port. To prevent unauthorized adjustment, the padlock slide may be assembled on either side. It is recommended that this slide is installed after final system assembly.

The Safety Lockout valves conform to OSHA #29 CFR part 1910 – control of hazardous energy source (lockout / tagout).

Operating Information

Operating pressure (max):		254 psig (17.5 bar)
Operating pressure (min):		29 psig (2 bar)
Operating temperature:		14°F to 140°F (-10°C to 60°C)
Flow capacity†:	3/4"	705.6 scfm (333 dm³/s, ANR)
	1"	705.6 scfm (333 dm³/s, ANR)
Weight:	3/4"	2.4 lb (1.1 kg)
	1"	2.4 lb (1.1 kg)

Ordering Information:

P3YVA	1	8	LBN
Basic Series	Thread Type*	Port Size	

Basic Series	
Modular Ball Valve	P3YVA

Thread Type*	
BSPP	1
NPT	9

Port Size	
3/4	6
1	8

*** Note:** For 1-1/2" ported unit, please order P3YKA*BCP port block kit separately.

Material Specifications

Body	Aluminum
Valve ball	Brass / nickle plated
Handle	Aluminum
Seals	Nitrile NBR
Exhaust silencer	Sintered bronze

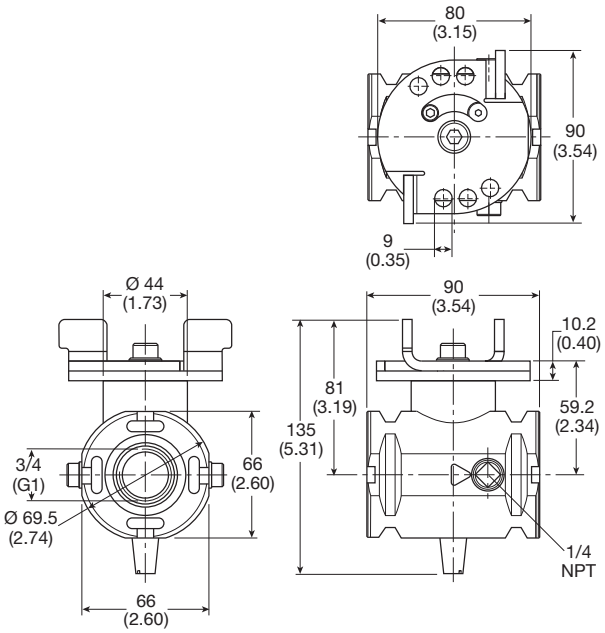

mm (Inches)

Most Popular

Modular Manifold

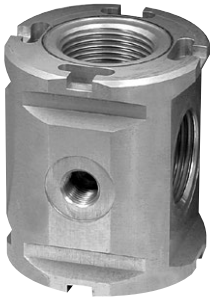

P3Y Series Manifolds provide up to 4 extra outlet ports. They may be assembled at any position in a combination e.g. before the lubricator to provide oil free take off or at the end of a combination to provide extra outlet ports.

Thread Type	Part Number
BSPP	**P3YMA1V0N**
NPT	**P3YMA9V0N**

Port sizes

Inlet Port	Top	Bottom	Front and Back
3/4", 1"	1/8"	1"	1/4"

Material Specifications

Body	Aluminum
Weight	0.7 kg (1.5 lb)

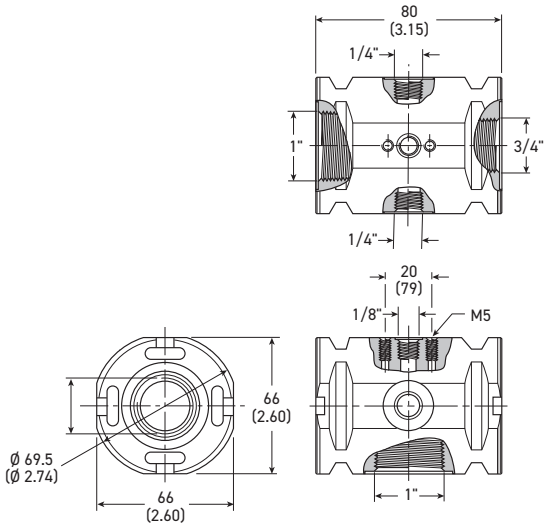

mm (Inches)

Optional Port Block Kits

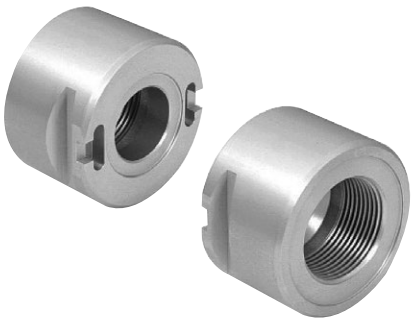

- To change port sizes Port Block Kits are available.
- Allows assemblies to be removed from a hard piped system.

Material Specifications

Body	Aluminum
Weight	0.65 kg (1.43 lb)

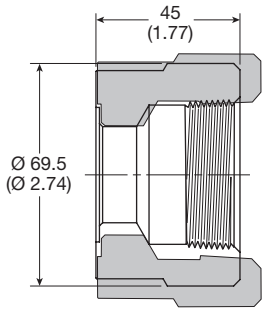

Inches (mm)

Ordering Information:

P3YKA	1	B	CP
Basic Series	Thread Type	Port Size	
Port Blocks P3YKA	BSPP 1	1-1/2 B	
	NPT 9		

Most Popular

Description		Connection	Weight lb (kg)	Part Number	
0.01 micron Element Kit				**P3YKA00ESC**	
1 micron Element Kit				**P3YKA00ES9**	
5 micron Element Kit				**P3YKA00ESE**	
30 micron Element Kit				**P3YKA00ESG**	
Adsorber Element Kit				**P3YKA00ESA**	
Bowl Kit With Combined Manual / Semi-Auto Drain				**P3YKA00BSC**	
Bowl Kit With Auto Drain				**P3YKA00BSA**	
Bowl Kit				**P3YKA00BSN**	
Connector O-Ring Kit	Qty: 5			**P3YKA08CY**	
Differential Pressure Indicator Kit				**P3YKA00RQ**	
Diaphragm Kit (Relieving Type)				**P3YKA00RR**	
Diaphragm Kit (Non-Relieving Type)				**P3YKA00RN**	
Key Lock (Replacement)				**P3XKA00AS**	
Lubricator Oil	VG32 - 1 litre		2.03 (0.92)	**P3YKA00PPBB**	
Neck Mounting Bracket Kit			8.27 (3.75)	**P3YKA00MS**	
P3y Connecting Kit			0.11 (0.05)	**P3YKA00CB**	
Panel Mounting Nut (Aluminum)			1.54 (0.70)	**P3YKA00MM**	
Pressure Gauge	0 to 300 psig 0 to 20 bar	1/4"	0.13 (0.06)	**KG8013-00**	
Refill Plug				**P3YKA00PL**	
Wall Mounting Brackets			0.44 (0.2)	**P3YKA00CW**	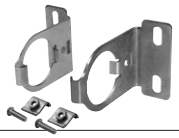

Pressure Switches

P31/P32/P33/ P3Y	Pressure Switches KL with plug	1/8 male, 1 à 10 bar (PR / 1-10 NC ST 1/8 48) Break contact, IP65, Max 48V 1 to 10 bar (PR / 1-10 NO ST 1/8 48) Make contact, IP65, Max 48V	KL3437-00 KL3438-00	
	Adapter	* Male-1/4 to female-1/8	0178 13 10	
	Pressure sensor block without plug	0,5 to 8 (G1/4-8I-DIN), IP65, Max 250V 1 to 16 (G1/4-16I-DIN), IP65, Max 250V	KL3202-00 KL3203-00	
	Adapter	* Male-1/4 to male-1/4	0901 00 13	
	plug DIN EN 175301-803, Form A, ISO 4400	GSD-30DS Standard 4-pin GSD-30DSL24V with DEL 24V 4-pin GSD-30DSL230V with DEL 230V 4-pin	KL3349-00 KL3350-00 KL3351-00	

Most Popular

Parker Hannifin Corporation
Motion Systems Group Europe
Parker Hannifin EMEA Sàrl European Headquarters
La Tuilière 6 Etoy
Switzerland CH-1163
www.parker.com

PDE2676TCUK 10/2024

Your Local Authorized Parker Distributor

© 2024 Parker Hannifin Corporation